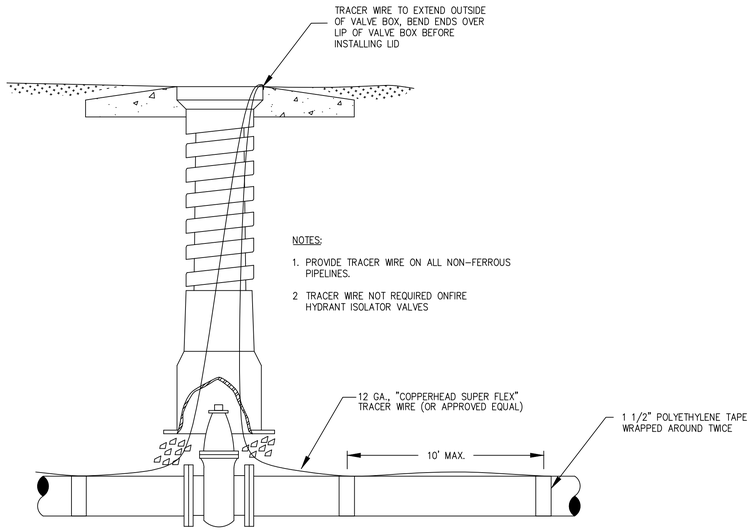

NOTES:

1. PROVIDE TRACER WIRE ON ALL NON-FERROUS PIPELINES.
2. TRACER WIRE NOT REQUIRED ONFIRE HYDRANT ISOLATOR VALVES

TRACER WIRE AT VALVES
DETAIL WS-13

NOTE:
1. WIRE COLOR REQUIRED
- SEWER-GREEN
- WATER-BLUE
- RECLAIMED WATER-PURPLE OR GREEN WITH PURPLE STRIPE

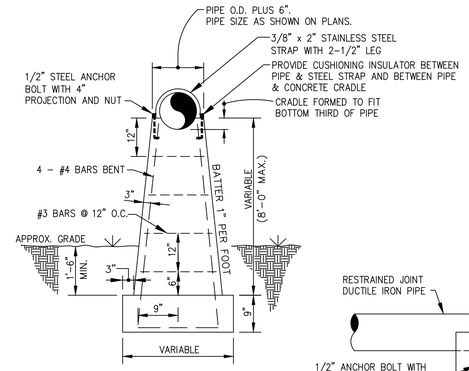

END VIEW

NOTES:

1) PIERS OVER 3'-0" IN HEIGHT TO BE REINFORCED.
2) SET PIPE BOTTOM A MINIMUM OF 2' ABOVE THE 25 YEAR WATER SURFACE ELEVATION.
3) CAST-IN-PLACE CONCRETE SHALL BE FIELD TESTED.
4) AT A MINIMUM, ONE PIER MUST BE INSTALLED EVERY 20-FT OR AS DIRECTED BY THE ENGINEER.
5) ENGINEER SHALL VERIFY FOUNDATION REQUIREMENTS, REBAR SIZE, AND ALL OTHER DIMENSIONS.

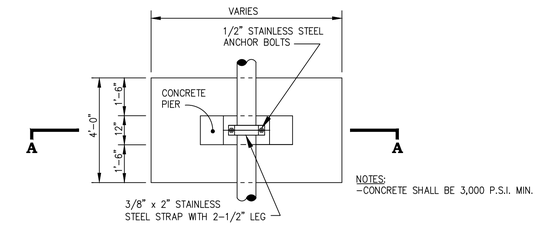

PLAN VIEW

NOTES:
-CONCRETE SHALL BE 3,000 P.S.I. MIN.

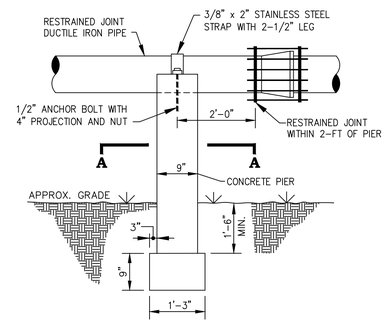

SIDE VIEW

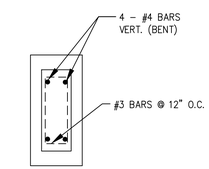

SECTION "A-A"

AERIAL PIPE CROSSING
DETAIL WS-15

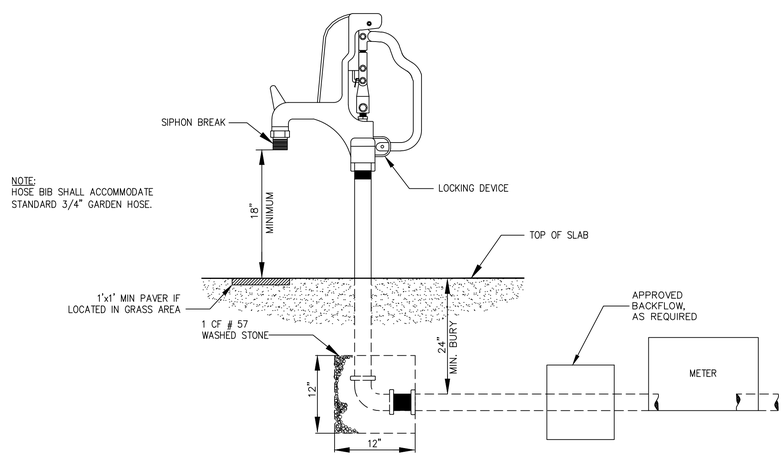

NOTE:
HOSE BIB SHALL ACCOMMODATE STANDARD 3/4" GARDEN HOSE.

LOCKABLE YARD HYDRANT
DETAIL WS-14

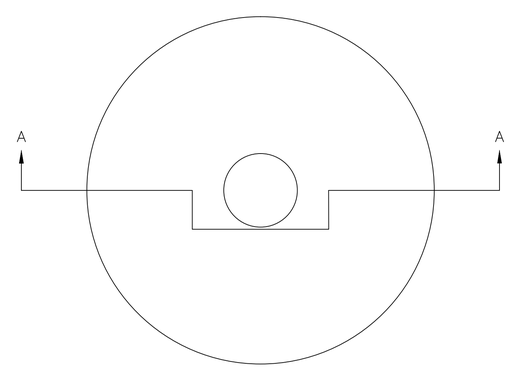

PLAN

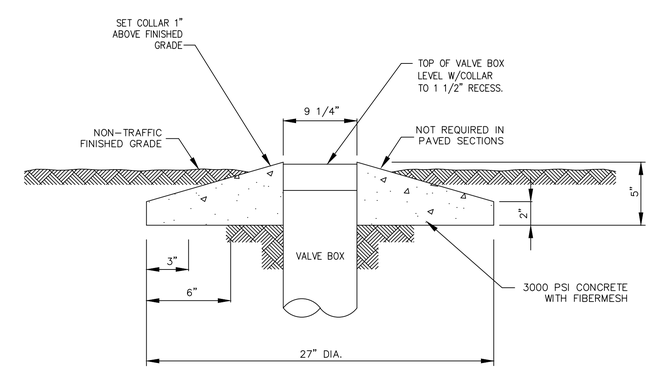

SECTION A-A

PRECAST CONCRETE VALVE BOX COLLAR
DETAIL WS-16

Revisions

COUNTY OF BRUNSWICK

GENERAL WATER & SEWER DETAILS
FOR
BRUNSWICK COUNTY
NORTH CAROLINA

Date: 06-12-12
Scale: NTS
Drawn By: JDM
Checked By: WLP