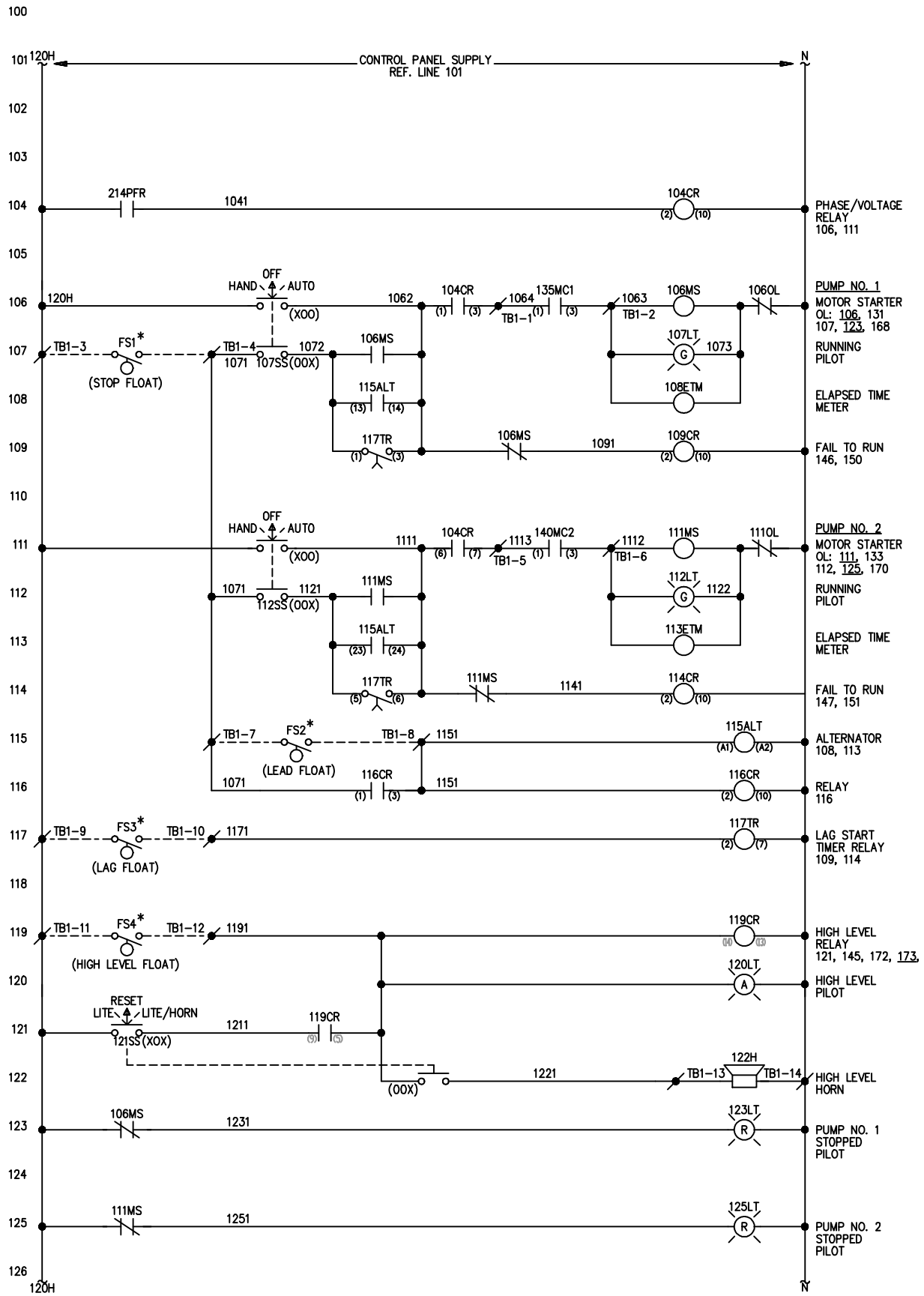

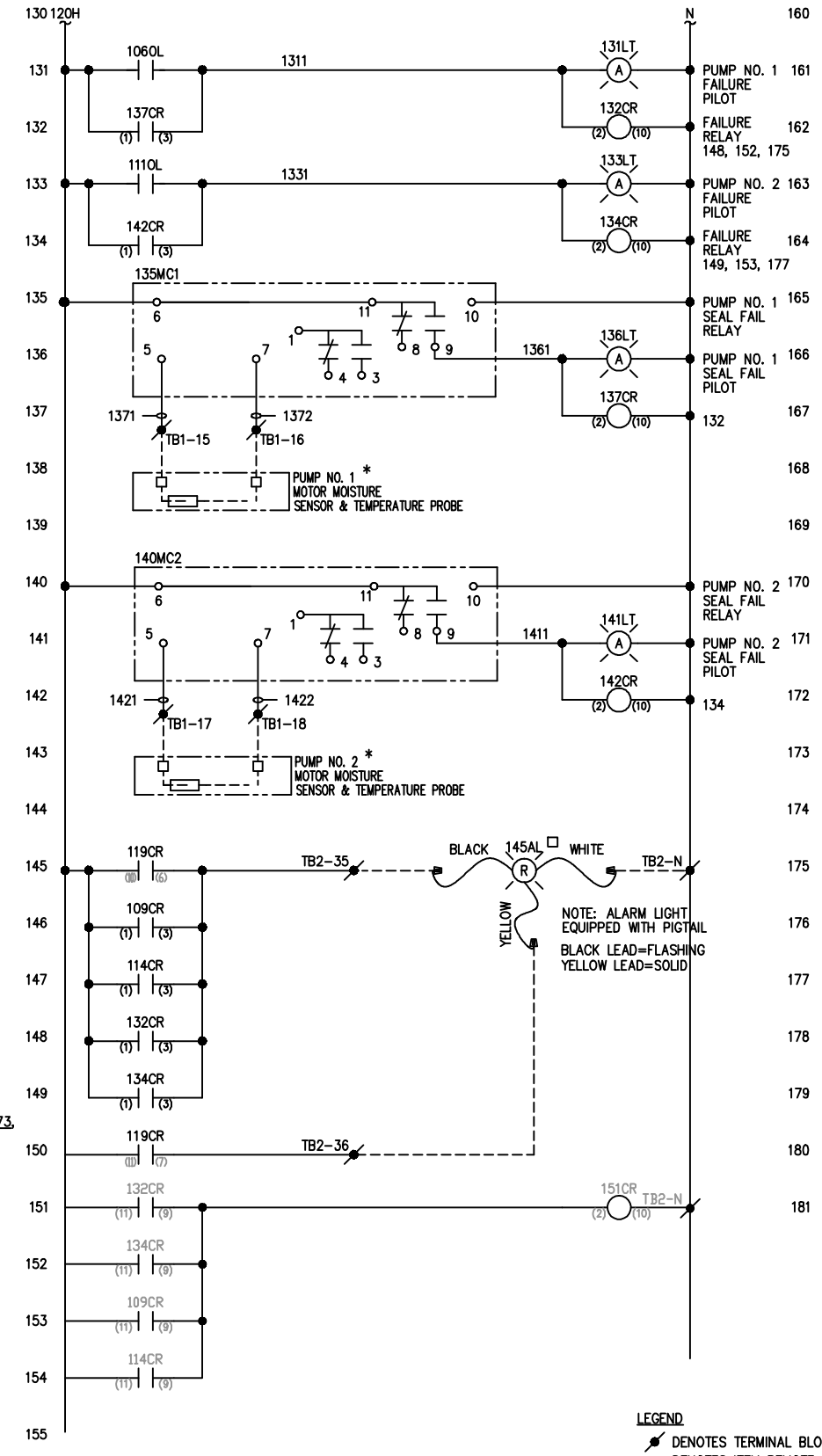

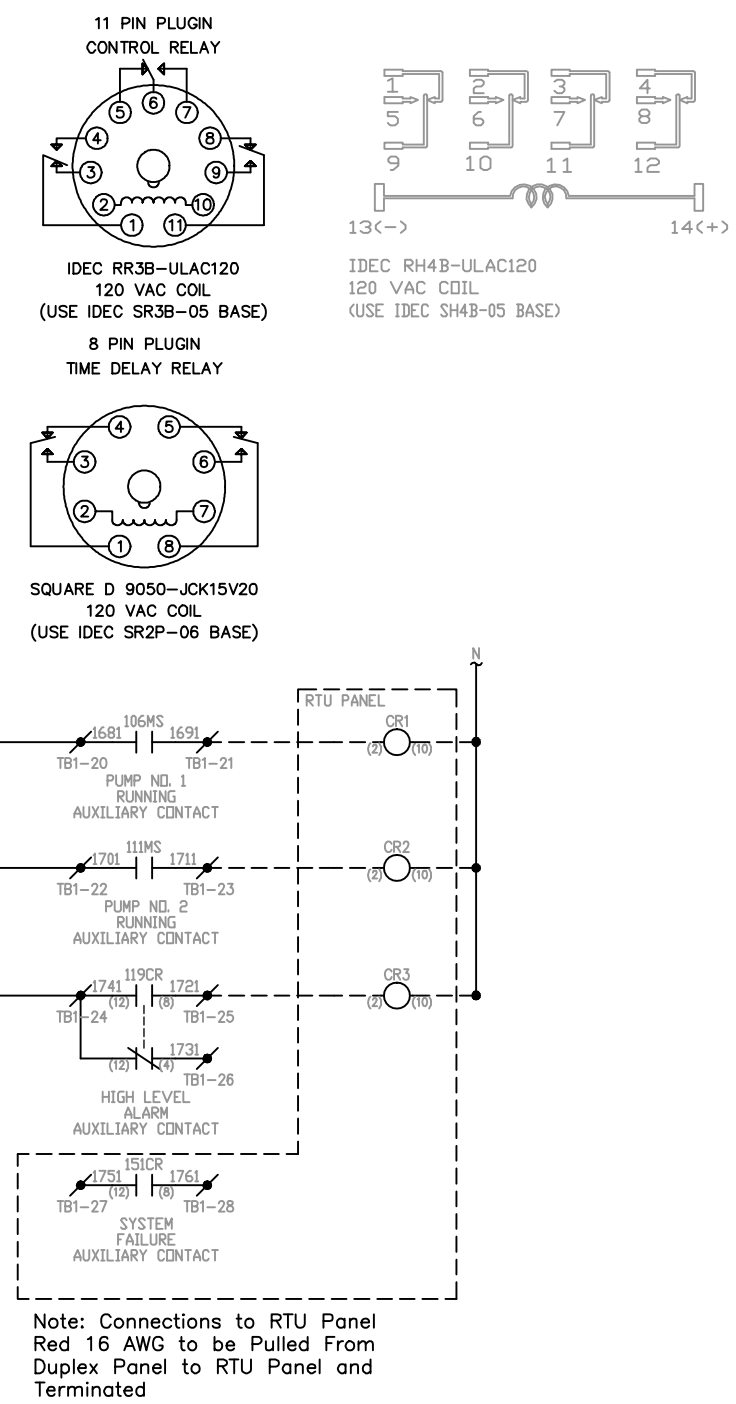

Note: Connections to RTU Panel Red 16 AWG to be Pulled From Duplex Panel to RTU Panel and Terminated

LEGEND

- DENOTES TERMINAL BLOCK IN CONTROL PANEL
- * DENOTES ITEM REMOTE FROM CONTROL PANEL
- DENOTES FIELD WIRING BY OTHERS
- △ DENOTES ITEM SUPPLIED BY OTHERS
- □ DENOTES ITEM SUPPLIED BY RSI INSTALLED BY OTHERS

NO.	REVISION	DATE	APPROVED BY
1			

Brunswick County

DATE	DESIGN BY	ENGINEER	SCALE
05/15/07	S.T.E		NONE

TITLE-DESCRIPTION
SEWAGE LIFT STATION
DUPLEX PUMP CONTROL PANEL DETAIL

PROJECT
BRUNSWICK CO.
SCADA SYSTEM

DRAWING NUMBER
ELAD_02