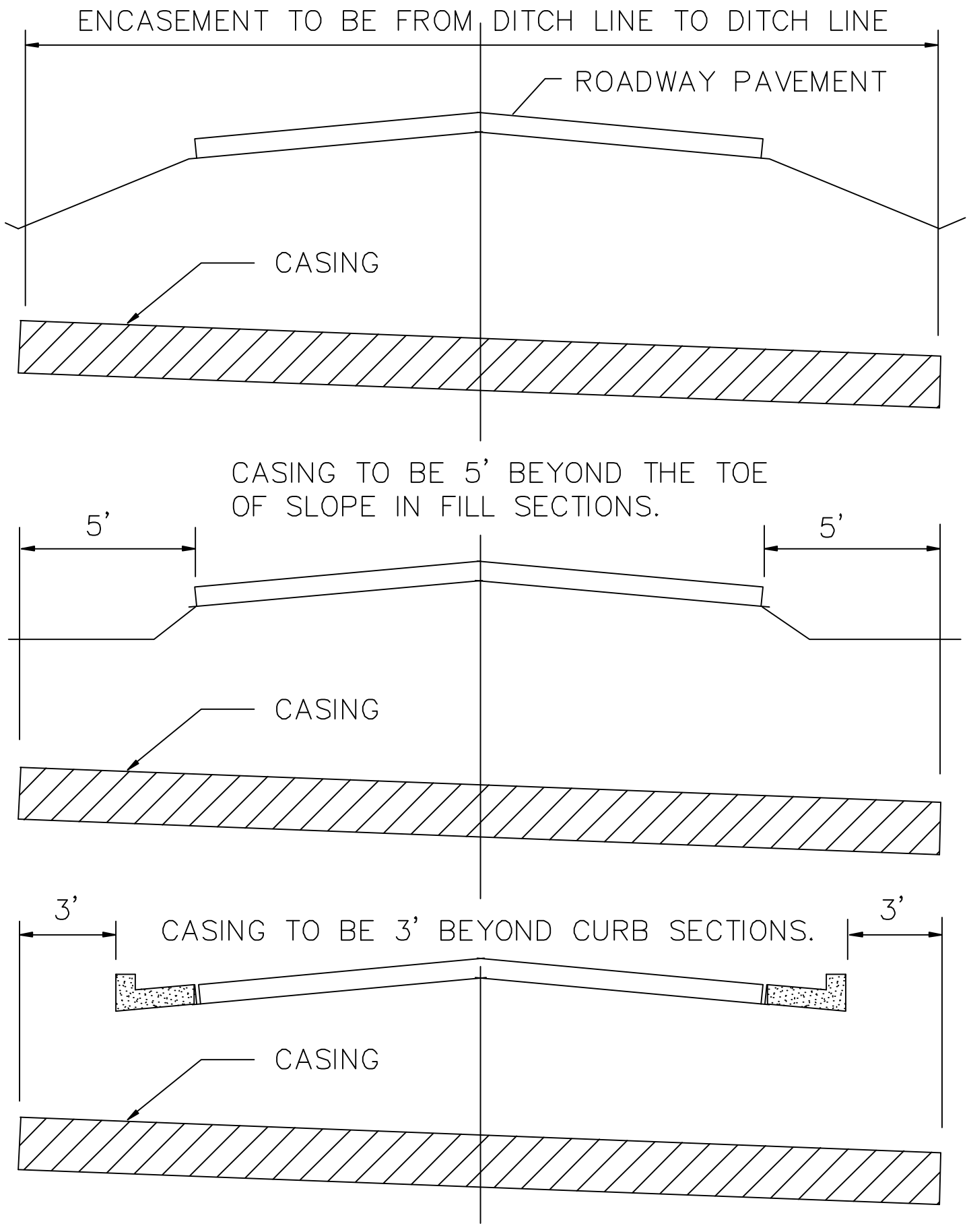

CASING LENGTH CONDITIONS

NO SCALE

NO.	REVISION	DATE

BRUNSWICK COUNTY
45 COURTHOUSE DRIVE
BOLIVIA, NORTH CAROLINA
28442

DATE:
PLOT SCALE: 1 = 1
FILE NO. W-12