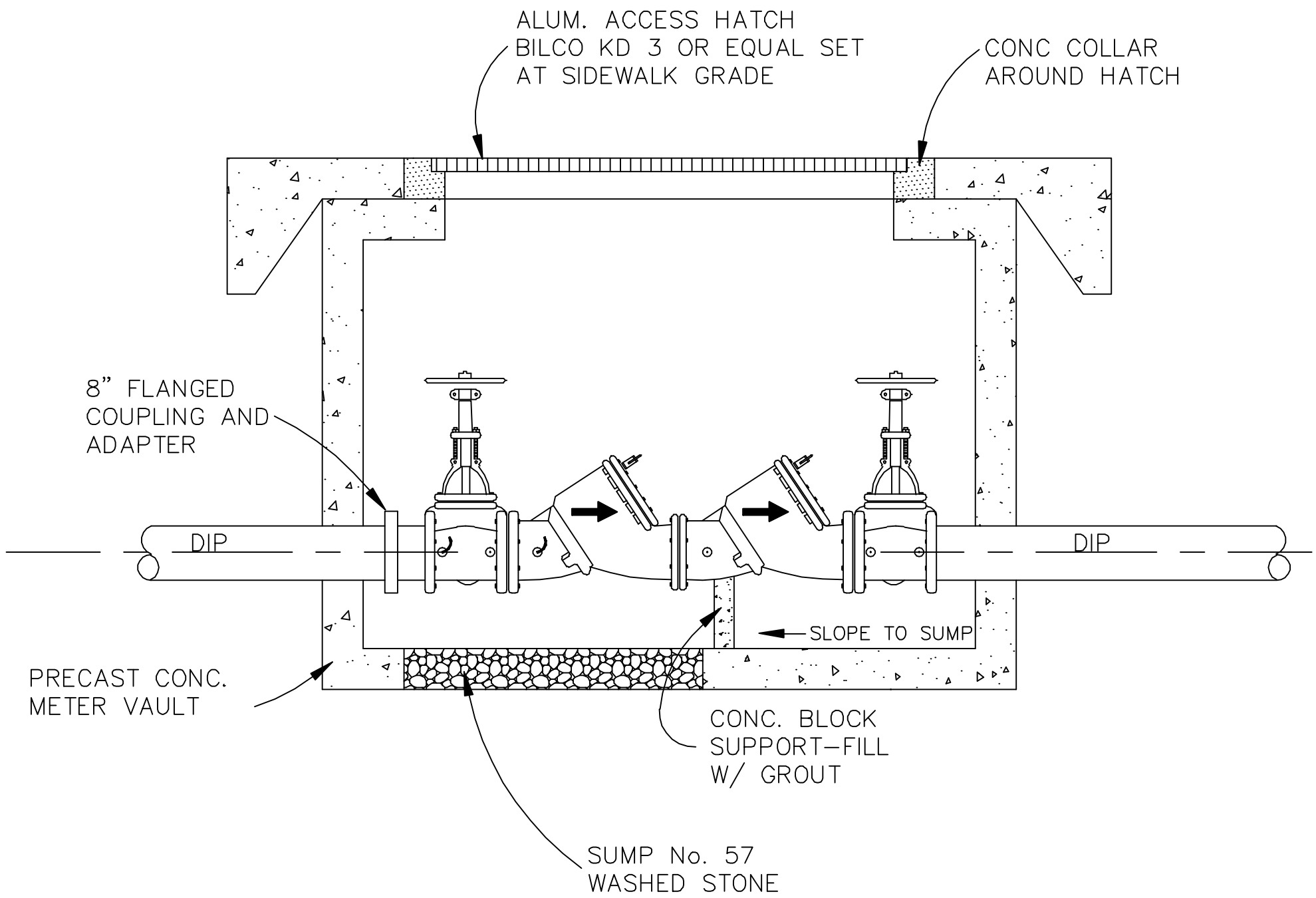

DETAIL-FIRE SERVICE ENTRY

NOT TO SCALE

NO.	REVISION	DATE

BRUNSWICK COUNTY
45 COURTHOUSE DRIVE
BOLIVIA, NORTH CAROLINA
28442

DATE:

PLOT SCALE: 1 = 1

FILE NO. W-21