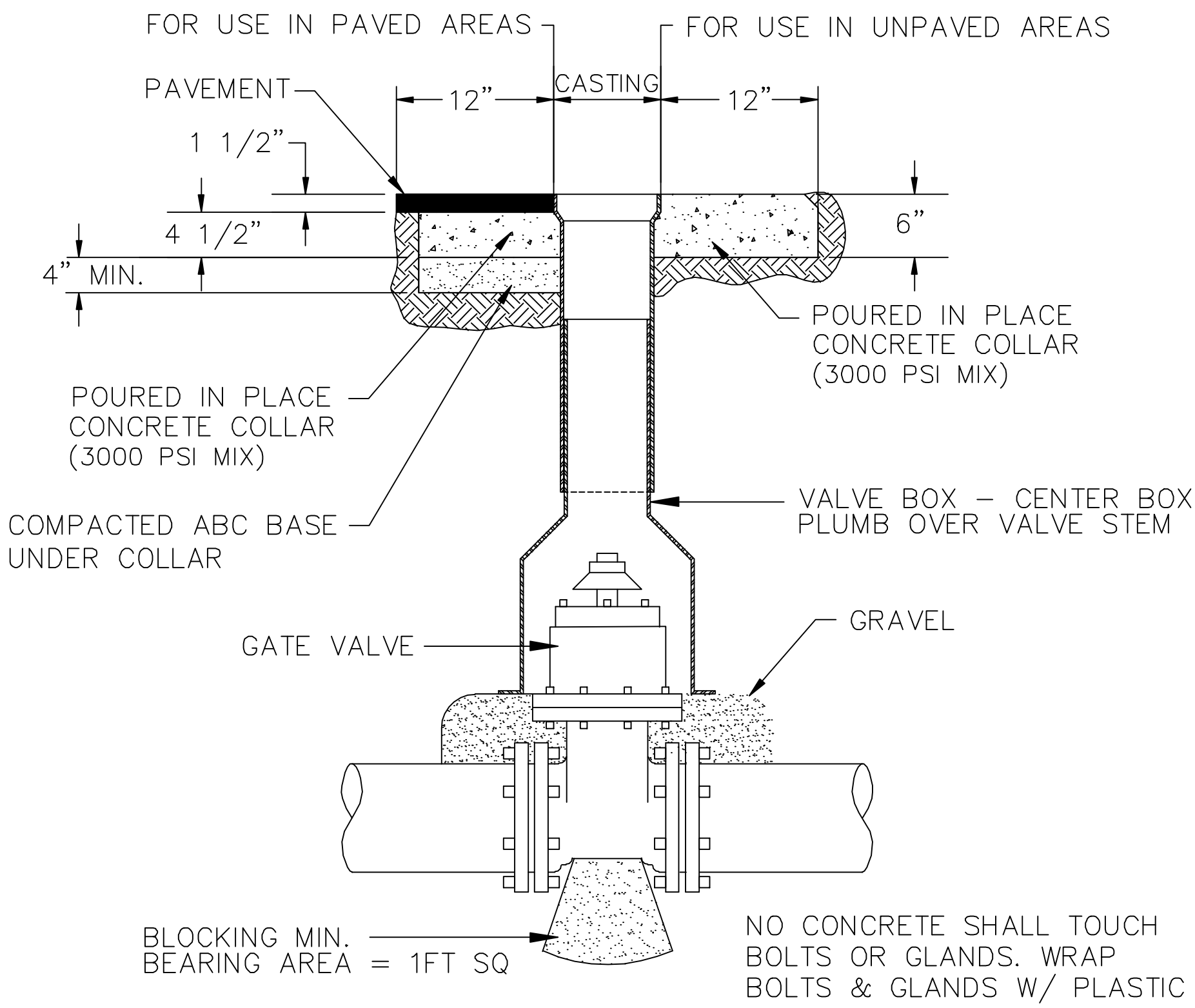

M.J. VALVE AND VALVE BOX

NTS

NO.	REVISION	DATE

BRUNSWICK COUNTY
45 COURTHOUSE DRIVE
BOLIVIA, NORTH CAROLINA
28442

DATE:
PLOT SCALE: 1 = 1
FILE NO. W–4