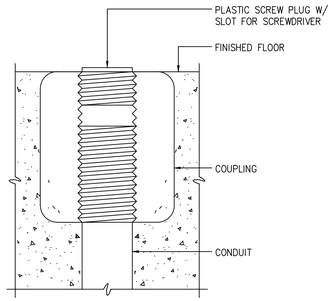

CONDUIT, FLOOR STUB-UP

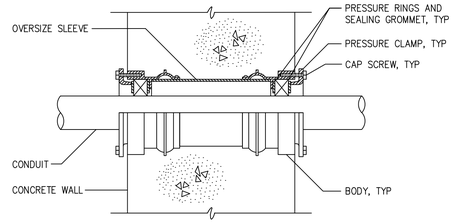

NOTE: USE O-Z/GEDNEY SEAL, TYPE "FSK", "WSK", OR EQUAL

CONDUIT THROUGH WALL SEAL

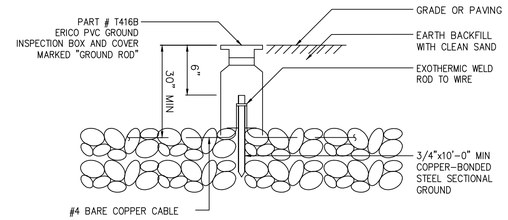

NOTES:

1 REFER TO PS DESIGN MANUAL FOR MINIMUM SYSTEM RESISTANCE. IF THIS RESISTANCE CANNOT BE MET WITH SINGLE 10'-0" RODS, ADD ADDITIONAL SECTIONS TO RODS OR ADD NEW RODS AS REQUIRED, SPACED 6'-0" TO 10'-0" FROM EXISTING RODS.

ELECTRICAL INSTALLATION DETAIL
GROUND ROD ASSEMBLY

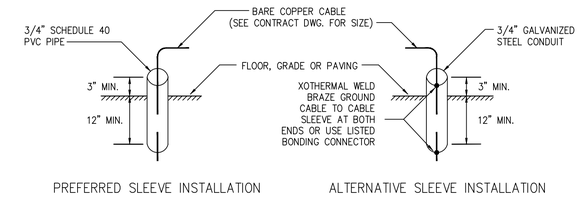

GROUND CABLE SLEEVE INSTALLATION

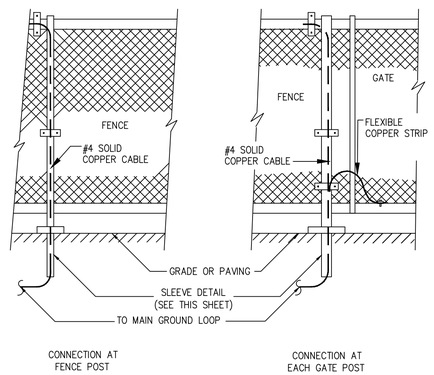

NOTE: PER BRUNSWICK COUNTY DIRECTION, IF REQUIRED, THE PUMP STATION FENCE AND GATES SHALL BE BONDED TO THE PUMP STATION GROUNDING SYSTEM AS SHOWN.

FENCE GROUNDING INSTALLATION DETAIL

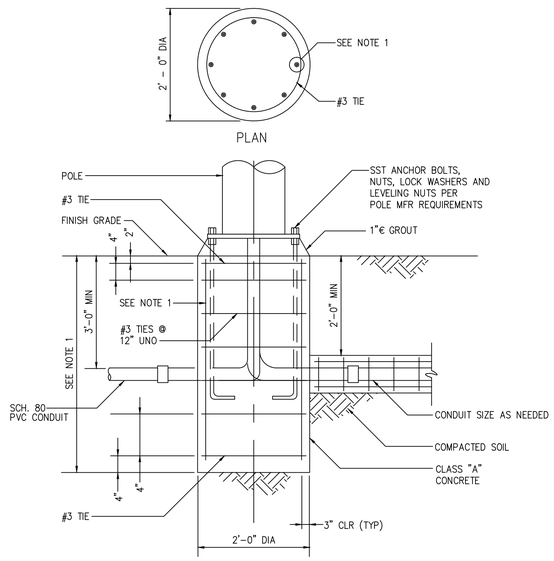

NOTES:

1 IF NOT SPECIFIED OR SHOWN, DEPTH AND REINFORCEMENT SHALL BE DETERMINED BY POLE MANUFACTURER. LOADING SHALL BE DEAD LOAD PLUS 100 MPH WIND, STANDARD EXPOSURE PER STANDARD BUILDING CODE.

AREA LIGHTING FIXTURE MOUNTING

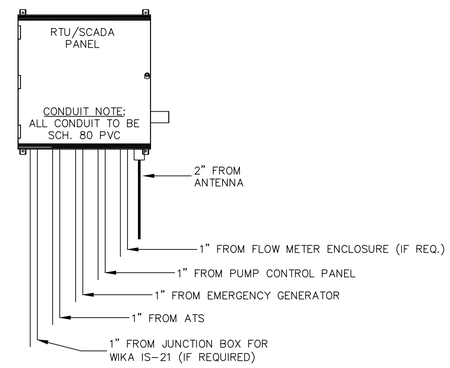

SCADA/RTU PANEL CONDUIT DETAIL

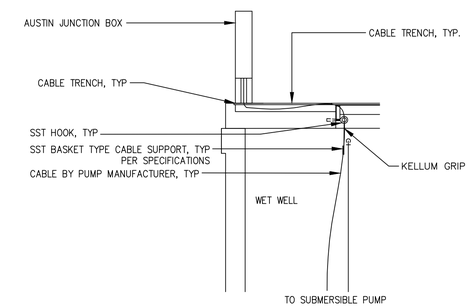

PUMP CABLE DETAIL

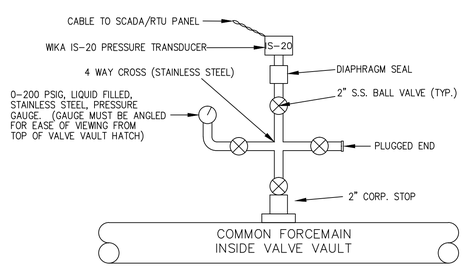

PRESSURE GAUGE AND TRANSDUCER DETAIL
(ALTERNATE)

NOTES:

1. PRESSURE TRANSDUCER – WIKA IS-20, 0-200 PSI, OUTPUT 4-20 MA, CABLE LENGTH 100' MINIMUM OR AS REQUIRED TO CONNECT TO SCADA/RTU PANEL WITHOUT SPLICES (PART #52358038)
2. DIAPHRAGM SEAL – WIKI, TYPE L990.36, ½" NPT
3. PRESSURE TRANSDUCER CABLE MUST REACH THE SCADA/RTU PANEL WITHOUT SPLICING AND WILL BE INSTALLED IN A 1" DIAMETER, SCH. 80 PVC CONDUIT.
4. CONTRACTOR SHALL ASSEMBLE THE "PRESSURE GAUGE AND TRANSDUCER DETAIL (ALTERNATE)" AS COMPACTLY AS POSSIBLE INSIDE THE PUMP STATION VALVE VAULT.

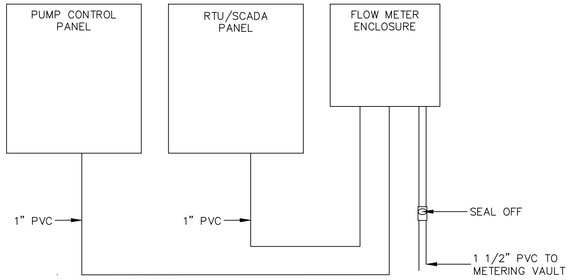

FLOW METER ENCLOSURE
WIRING SCHEME

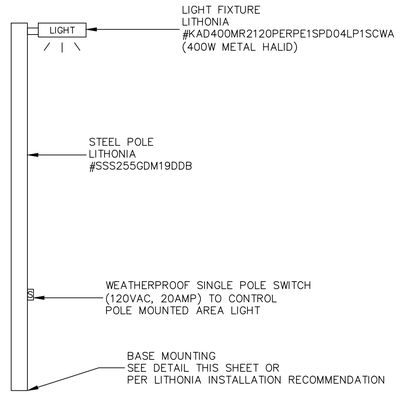

AREA LIGHTING FIXTURE MOUNTING

Revisions

1.1 - DATED 8/8/2013
Modified Transducer Det.
1.2 - DATED 10/15/2013
Add. Flow Meter Detail +
Mod. RTU Panel Detail.

COUNTY OF BRUNSWICK

PUMP STATION DETAILS
50 HP OR SMALLER PUMP STATION
FOR
BRUNSWICK COUNTY
NORTH CAROLINA

Date: 04-25-12
Scale: NTS
Drawn By: JDM
Checked By: WLP