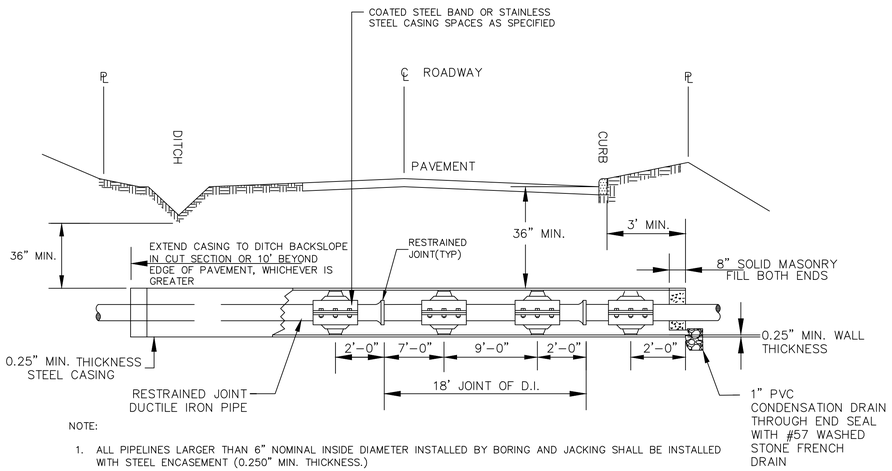

NOTE:

1. ALL PIPELINES LARGER THAN 6" NOMINAL INSIDE DIAMETER INSTALLED BY BORING AND JACKING SHALL BE INSTALLED WITH STEEL ENCASEMENT (0.250" MIN. THICKNESS.)
2. ENDS OF CASING SHALL BE SEALED USING A MODEL AC PULL-ON END SEAL GASKET, AS MANUFACTURED BY ADVANCE PRODUCT SYSTEMS, INC., OR APPROVED EQUAL IN LIEU OF MASONRY FILL.
3. STEEL CASING SHALL EXTEND A MINIMUM OF 3' BEYOND BACK OF CURB, SIDEWALK, OR PAVEMENT EDGE. FOR STREETS WITH A SHOULDER AND DITCH CROSS SECTION, CASING SHALL EXTEND TO BACK SLOPE OF DITCH IN CUT SECTIONS OR TO 10' BEYOND EDGE OF PAVEMENT, WHICHEVER IS GREATER.
4. WHEN CARRIER PIPE IS USED FOR CONVEYING LIQUID FLAMMABLE SUBSTANCES, VENT PIPES SHALL BE PROVIDED FROM ENDS OF CASING TO PROPERTY LINE.
5. CASING PIPE SECTION JOINTS SHALL BE WELDED COMPLETELY AROUND THE CIRCUMFERENCE OF EACH JOINT, NO GAPS IN WELDED BEAD ALLOWED.
6. PER NCDOT:

   WELDING 1072-18: QUALIFICATIONS OF PERSONNEL

   WELDERS MUST BE CERTIFIED TO MEET STATE REQUIREMENTS AS NOTED WITHIN THE NCDOT STANDARD SPECIFICATIONS FOR ROADS AND STRUCTURES (2012). UPON REQUEST, EVIDENCE OF SUCH QUALIFICATIONS SHALL BE FURNISHED TO THE NCDOT DEPARTMENT ENGINEER OR HIS/HER REPRESENTATIVE.

JACK AND BORE FOR ROADWAYS
DETAIL WS-6

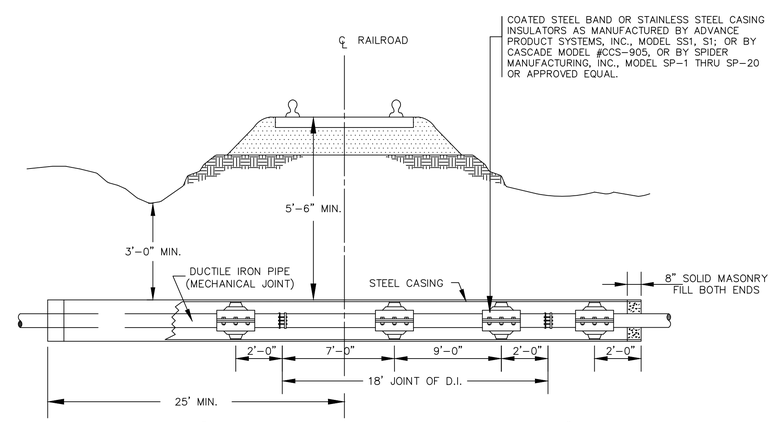

ALSO SEE THE "A.R.E.A. MANUAL FOR RAILWAY ENGINEERING – PART 5, PIPELINES"

NOTE:
1. ENDS OF CASING SHALL BE SEALED USING A MODEL AC PULL-ON END SEAL GASKET, AS MANUFACTURED BY ADVANCE PRODUCT SYSTEMS, INC., OR APPROVED EQUAL IN LIEU OF MASONRY FILL.
2. MINIMUM WALL THICKNESS FOR STEEL CASING FOR E80 LOADING SHALL BE AS SPECIFIED IN TABLE 5.1.4.1 OF THE AMERICAN RAILWAY ENGINEERING ASSOCIATION (A.R.E.A.) MANUAL.
3. WHEN CARRIER PIPE IS USED FOR CONVEYING LIQUID FLAMMABLE SUBSTANCES, VENT PIPES SHALL BE PROVIDED FROM ENDS OF CASING TO PROPERTY LINE AS SPECIFIED IN SECTION 5.1.5.5 OF THE A.R.E.A. MANUAL.
4. RAILROAD OWNER (CSX, NORFOLK SOUTHERN, ETC.) WILL PROVIDE MINIMUM DESIGN CRITERIA.

JACK AND BORE FOR RAILROADS
DETAIL WS-7

Revisions

1.1 - DATED 5/29/2013
Added Note 6 to WS-6

COUNTY OF BRUNSWICK

GENERAL WATER & SEWER DETAILS
FOR
BRUNSWICK COUNTY
NORTH CAROLINA

Date: 07-11-12
Scale: NTS
Drawn By: JDM
Checked By: WLP