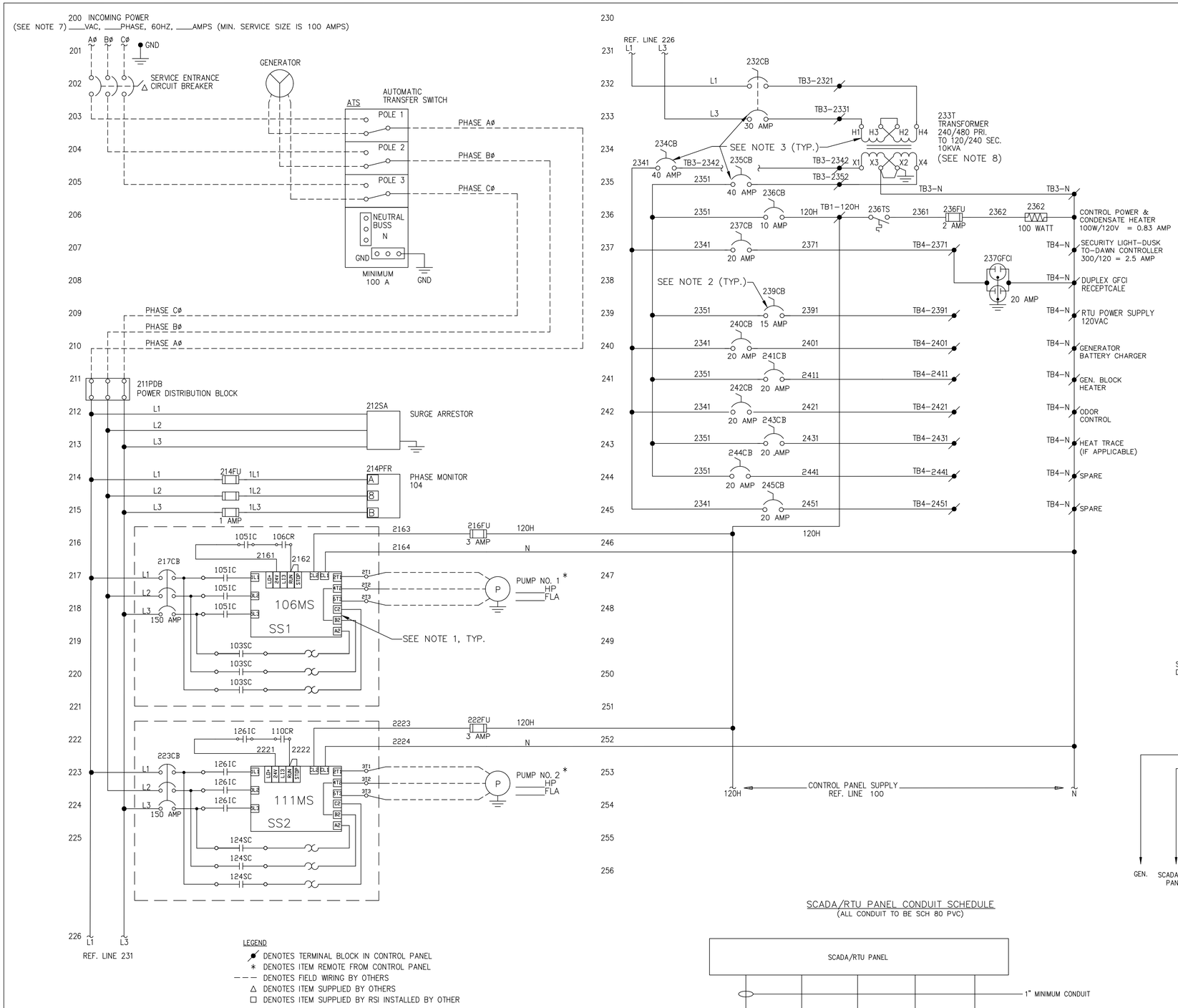

NOTES:

1. STARTING DEVICE SHOWN IS A REDUCED VOLTAGE SOLID STATE STARTER. STARTING DEVICE MAY BE A FULL VOLTAGE NON-REVERSING STARTER, A REDUCED VOLTAGE SOLID STATE STARTER, OR A VARIABLE FREQUENCY DRIVE DEPENDING ON THE SITUATION AND THE NEEDS OF THE PUMP STATION. LOCATE STARTING DEVICES OUTSIDE OF THE PUMP CONTROL PANEL WHERE APPROVED BY BRUNSWICK COUNTY, TYPICALLY FOR LARGER HORSEPOWER DESIGNS. STARTING DEVICES LOCATED OUTSIDE OF THE PUMP CONTROL PANEL SHALL BE LOCATED IN THEIR OWN ENCLOSURES. ENCLOSURES SHALL HAVE SUITABLE NEMA RATINGS FOR THE ENVIRONMENT THEY ARE LOCATED IN, AND SHALL BE APPROVED BY BRUNSWICK COUNTY ENGINEERING AND UTILITIES.
2. ADD ADDITIONAL CIRCUIT BREAKERS IN THE PUMP CONTROL PANEL WHERE NECESSARY TO ACCOMMODATE ADDITIONAL LOADS.
3. ADJUST THE SIZE OF THE TRANSFORMER AND CIRCUIT BREAKERS AS NECESSARY TO ACCOMMODATE ANY INCREASE IN THE MISCELLANEOUS LOAD.
4. PUMP MOTORS 10HP AND SMALLER CAN BE SINGLE PHASE POWER.
5. IF A WIKI IS-21 PRESSURE TRANSDUCER IS INSTALLED IN THE PUMP STATION VALVE VAULT, A MINIMUM 1" PVC CONDUIT MUST BE INSTALLED FROM THE VALVE VAULT TO J-BOX, THEN FROM THE J-BOX TO THE RTU/SCADA PANEL (OR TO THE ELECTRICAL BUILDING IF THE PUMP STATION HAS AN ELECTRICAL BUILDING).
6. PUMPS 10 HP AND SMALLER MAY BE SINGLE PHASE POWER.
7. DESIGN ENGINEER TO SPECIFY INCOMING POWER VOLTAGE, PHASE, AND AMPERES (MINIMUM SERVICE SIZE IS 100 AMPERES).
8. TRANSFORMER REQUIRED FOR 480 VAC PRIMARY PUMP STATIONS.

480VAC SCHEMATIC

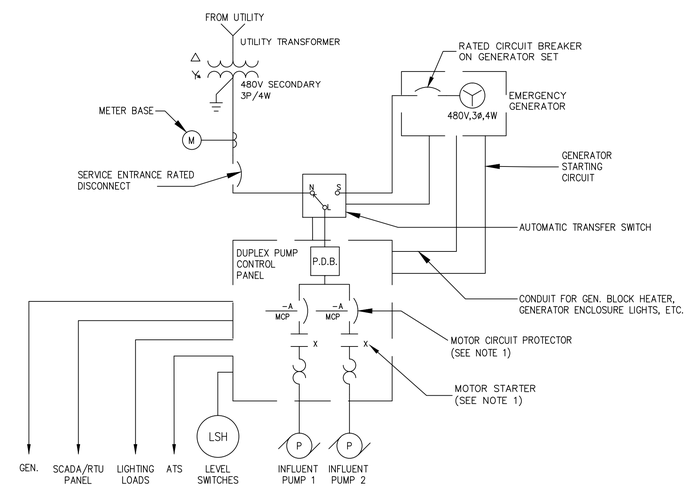

MOTOR HP	NEMA RATING	MCP
1-10HP	1	3-30A
10-25HP	2	30-50A
25-50HP	3	50-150A
50-100HP	4	150-400A

SCADA/RTU PANEL CONDUIT SCHEDULE
(ALL CONDUIT TO BE SCH 80 PVC)

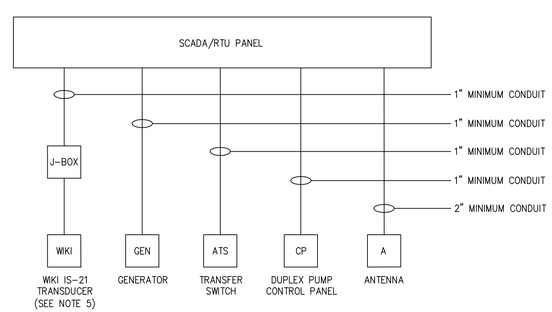

LEGEND

- DENOTES TERMINAL BLOCK IN CONTROL PANEL
- * DENOTES ITEM REMOTE FROM CONTROL PANEL
- DENOTES FIELD WIRING BY OTHERS
- △ DENOTES ITEM SUPPLIED BY OTHERS
- ☐ DENOTES ITEM SUPPLIED BY RSI INSTALLED BY OTHER

1-50 HP PUMP STATION ELECTRICAL DIAGRAMS

Revisions

COUNTY OF BRUNSWICK

PUMP STATION ELECTRICAL DETAILS
1-50 HP DUPLEX CONTROL PANEL
FOR
BRUNSWICK COUNTY
NORTH CAROLINA

Date: 04-17-12
Scale: NTS
Drawn By: JDM
Checked By: WLP