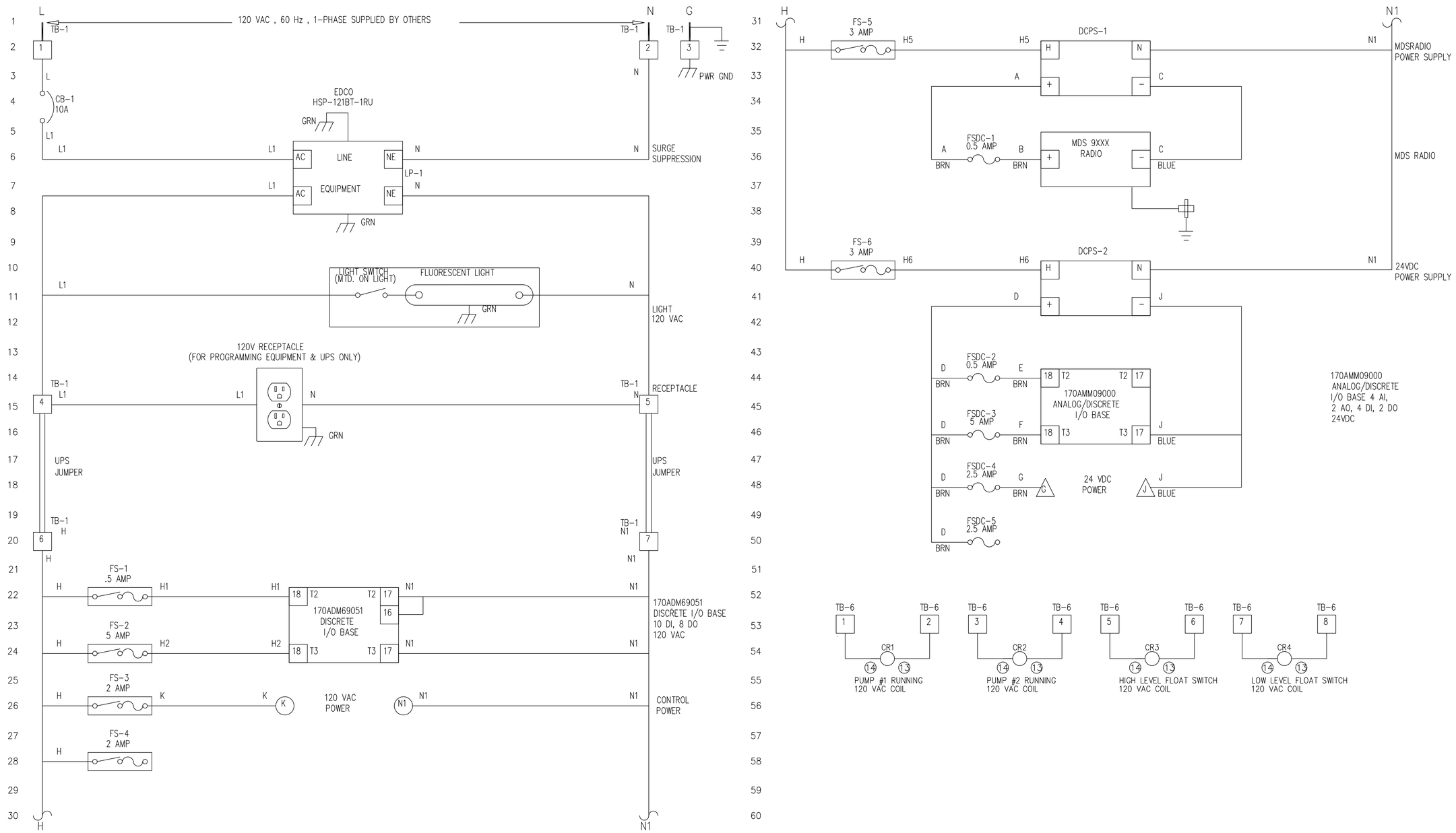

RTU PANEL
WIRING DIAGRAM DETAIL

Revisions

COUNTY OF BRUNSWICK

PUMP STATION SCADA / RTU DETAILS
1 - 50 HP
FOR
BRUNSWICK COUNTY
NORTH CAROLINA

Date: 05-21-12
Scale: NTS
Drawn By: JDM
Checked By: WLP