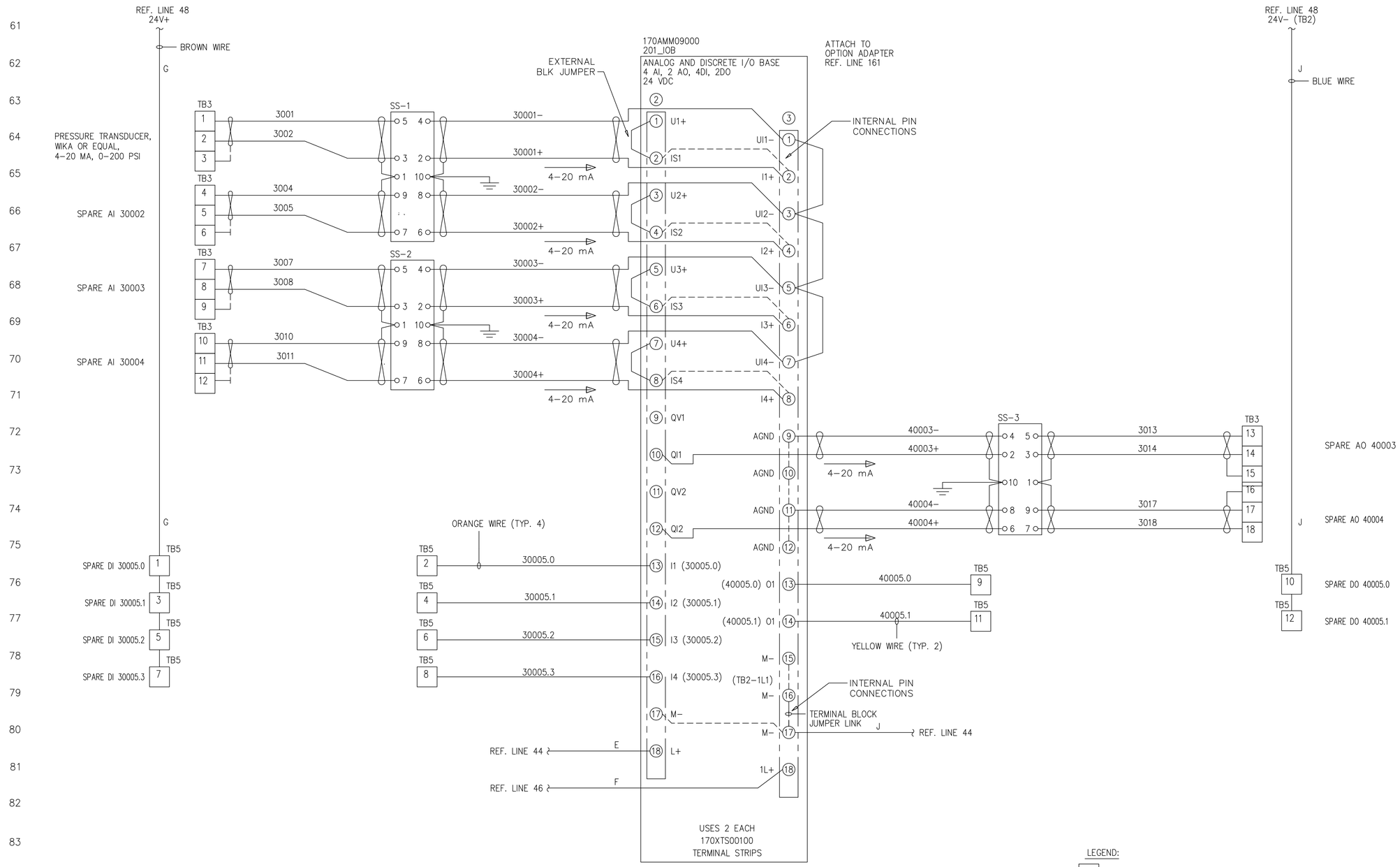

RTU PANEL
WIRING DIAGRAM DETAIL

LEGEND:

X	DENOTES A TERMINAL BLOCK POINT
*	DENOTES ITEM REMOTE FROM CONTROL PANEL
——	DENOTES WIRING EXTERNAL TO CONTROL PANEL

Revisions

COUNTY OF BRUNSWICK

PUMP STATION SCADA / RTU DETAILS
1 - 50 HP
FOR
BRUNSWICK COUNTY
NORTH CAROLINA

Date: 05-21-12
Scale: NTS
Drawn By: JDM
Checked By: WLP