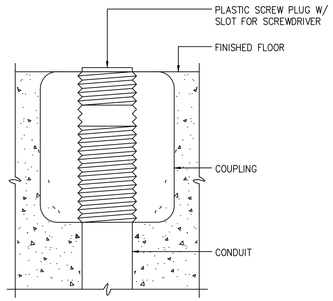


CONDUIT, FLOOR STUB-UP

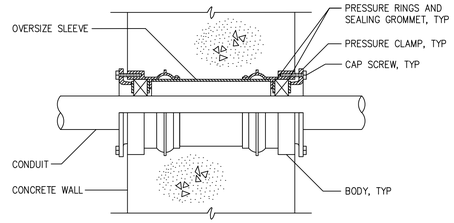


NOTE: USE O-Z/GEDNEY SEAL, TYPE "FSK", "WSK", OR EQUAL

CONDUIT THROUGH WALL SEAL

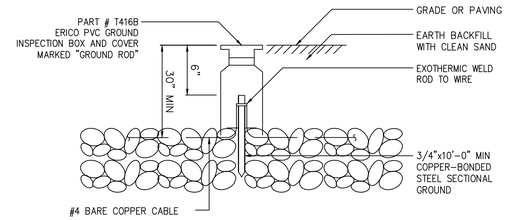


NOTES:

1 REFER TO PS DESIGN MANUAL FOR MINIMUM SYSTEM RESISTANCE. IF THIS RESISTANCE CANNOT BE MET WITH SINGLE 10'-0" RODS, ADD ADDITIONAL SECTIONS TO RODS OR ADD NEW RODS AS REQUIRED, SPACED 20'-0" MIN. FROM EXISTING RODS.

ELECTRICAL INSTALLATION DETAIL
GROUND ROD ASSEMBLY

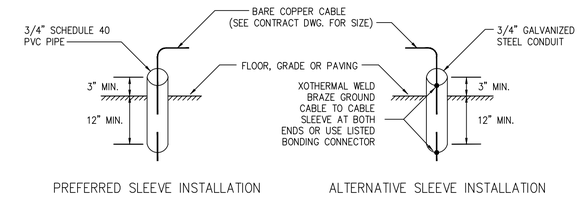


GROUND CABLE SLEEVE INSTALLATION

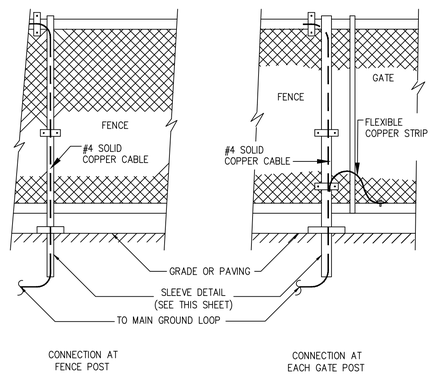


NOTE: PER BRUNSWICK COUNTY DIRECTION, IF REQUIRED, THE PUMP STATION FENCE AND GATES SHALL BE BONDED TO THE PUMP STATION GROUNDING SYSTEM AS SHOWN.

FENCE GROUNDING INSTALLATION DETAIL

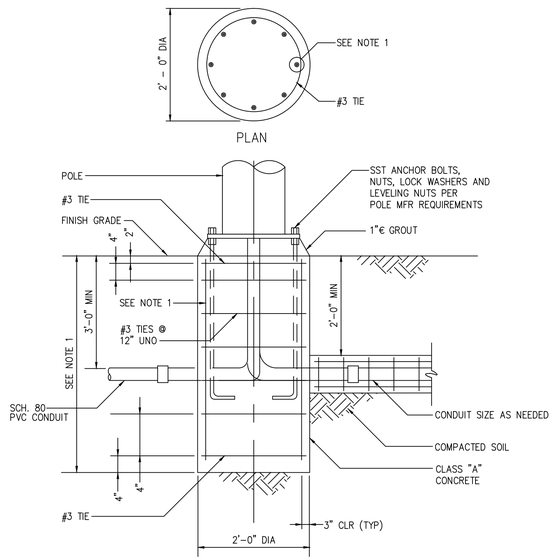


NOTES:

1 IF NOT SPECIFIED OR SHOWN, DEPTH AND REINFORCEMENT SHALL BE DETERMINED BY POLE MANUFACTURER. LOADING SHALL BE DEAD LOAD PLUS 100 MPH WIND, STANDARD EXPOSURE PER STANDARD BUILDING CODE.

AREA LIGHTING FIXTURE MOUNTING

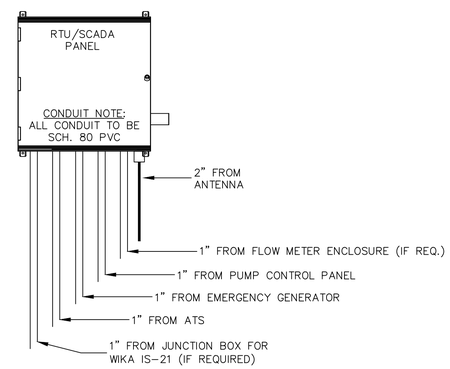


SCADA/RTU PANEL CONDUIT DETAIL

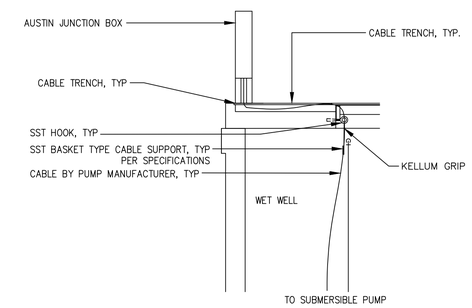


PUMP CABLE DETAIL

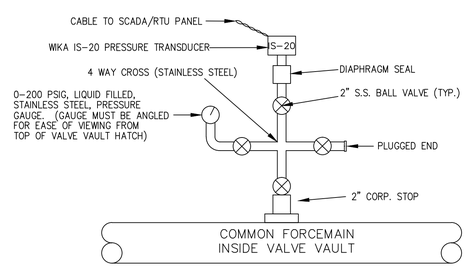


PRESSURE GAUGE AND TRANSDUCER DETAIL
(ALTERNATE)

NOTES:

1. PRESSURE TRANSDUCER – WIKA IS-20, 0-200 PSI, OUTPUT 4-20 MA, CABLE LENGTH 100' MINIMUM OR AS REQUIRED TO CONNECT TO SCADA/RTU PANEL WITHOUT SPLICES (PART #52358038)
2. DIAPHRAGM SEAL – WIKI, TYPE L990.36, ½" NPT
3. PRESSURE TRANSDUCER CABLE MUST REACH THE SCADA/RTU PANEL WITHOUT SPLICING AND WILL BE INSTALLED IN A 1" DIAMETER, SCH. 80 PVC CONDUIT.
4. CONTRACTOR SHALL ASSEMBLE THE "PRESSURE GAUGE AND TRANSDUCER DETAIL (ALTERNATE)" AS COMPACTLY AS POSSIBLE INSIDE THE PUMP STATION VALVE VAULT.

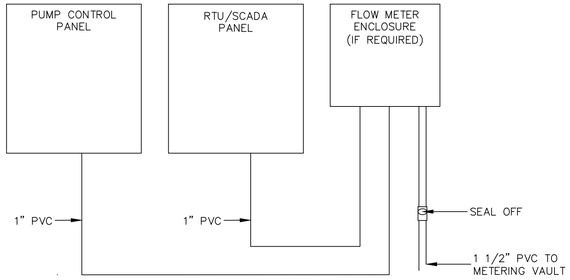


FLOW METER ENCLOSURE
WIRING SCHEME

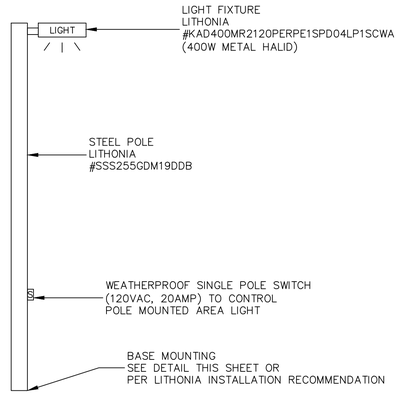


AREA LIGHTING FIXTURE MOUNTING

Revisions

1.1 - DATED 8/8/2013
Modified Transducer Det.
1.2 - DATED 10/15/2013
Add. Flow Meter Detail +
Mod. RTU Panel Detail.
1.3 - DATED 5/02/2016
Mod. ground rod detail

COUNTY OF BRUNSWICK

PUMP STATION DETAILS
50 HP OR SMALLER PUMP STATION
FOR
BRUNSWICK COUNTY
NORTH CAROLINA

Date: 04-25-12
Scale: NTS
Drawn By: JDM
Checked By: WLP