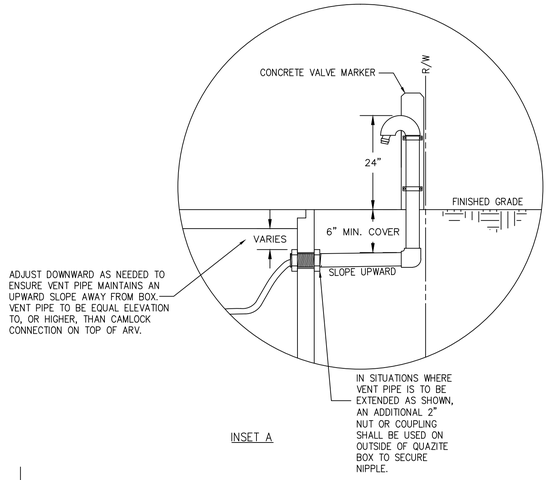

INSET A

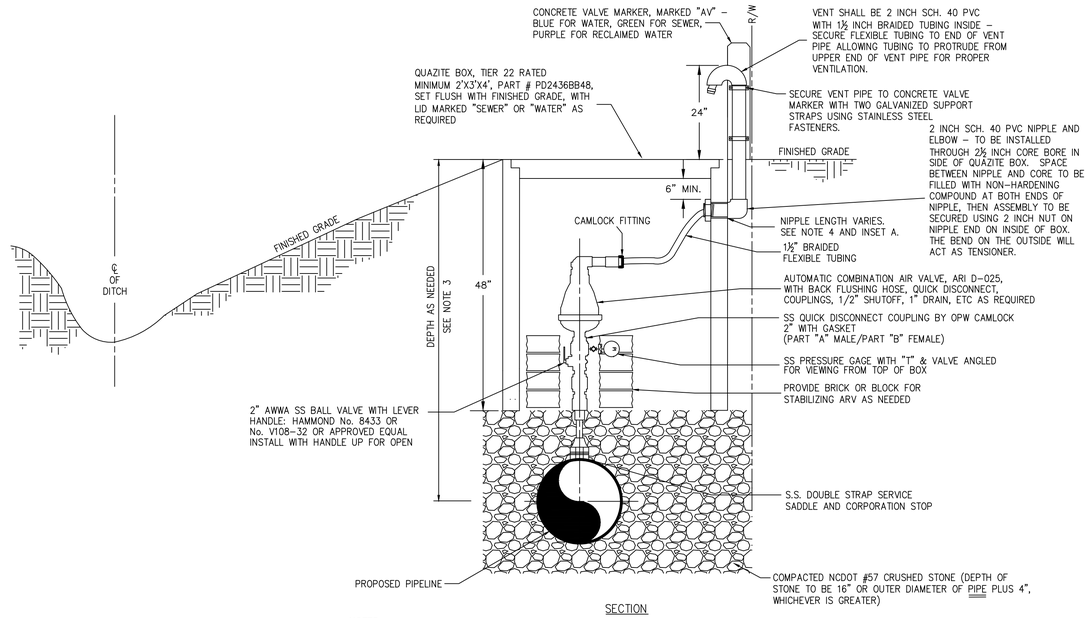

SECTION

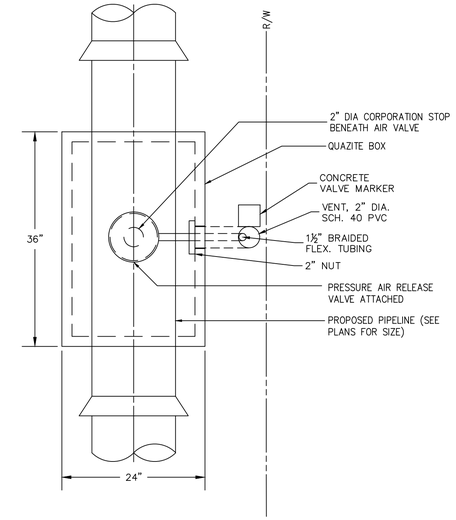

PLAN

NOTES:

1. USE AN APPROVED JOINT COMPOUND ON ALL THREADED CONNECTIONS.
2. 2" S.S. NIPPLES SHALL BE USED IF NEEDED.
3. CONTRACTOR SHALL ADJUST PIPELINE PROFILE DOWNWARD IN APPROACH TO ARV IN ORDER TO ATTAIN ADEQUATE DEPTH FOR ARV ASSEMBLY. TRANSITION LENGTH SHALL BE SUFFICIENT TO ENSURE THAT ARV IS LOCATED AT HIGH POINT.
4. SET VALVE MARKER AND VENT STACK AT RIGHT-OF-WAY LINE. EXTEND VENT PIPE AS REQUIRED (SEE INSET A).
5. AT THE DISCRETION OF BRUNSWICK COUNTY, THE VALVE MARKER AND VENT STACK MAY BE LOCATED IMMEDIATELY ADJACENT TO THE QUAZITE BOX IF THE DISTANCE FROM THE QUAZITE BOX TO THE RIGHT-OF-WAY LINE EXCEEDS 10 FEET, OR OBSTACLES OR FINISHED GRADE PREVENT VENT STACK INSTALLATION AT THE RIGHT-OF-WAY LINE.

STANDARD AIR RELEASE VALVE INSTALLATION
NCDOT R/W
DETAIL WS-1

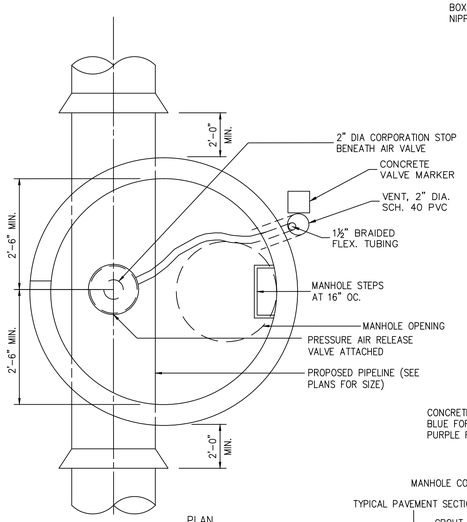

PLAN

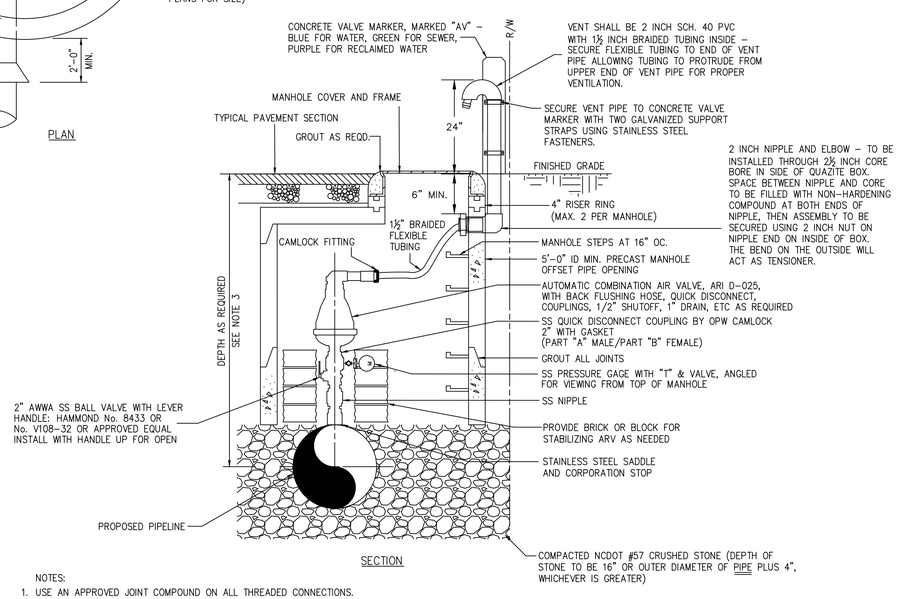

SECTION

NOTES:

1. USE AN APPROVED JOINT COMPOUND ON ALL THREADED CONNECTIONS.
2. 2" SS NIPPLES SHALL BE USED IF NEEDED.
3. CONTRACTOR SHALL ADJUST PIPELINE PROFILE DOWNWARD IN APPROACH TO ARV IN ORDER TO ATTAIN ADEQUATE DEPTH FOR ARV ASSEMBLY. TRANSITION LENGTH SHALL BE SUFFICIENT TO ENSURE THAT ARV IS LOCATED AT HIGH POINT.
4. SET VALVE MARKER AND VENT STACK AT RIGHT-OF-WAY LINE.

STANDARD MANHOLE AND AIR RELEASE VALVE
NON-NCDOT R/W
DETAIL WS-2

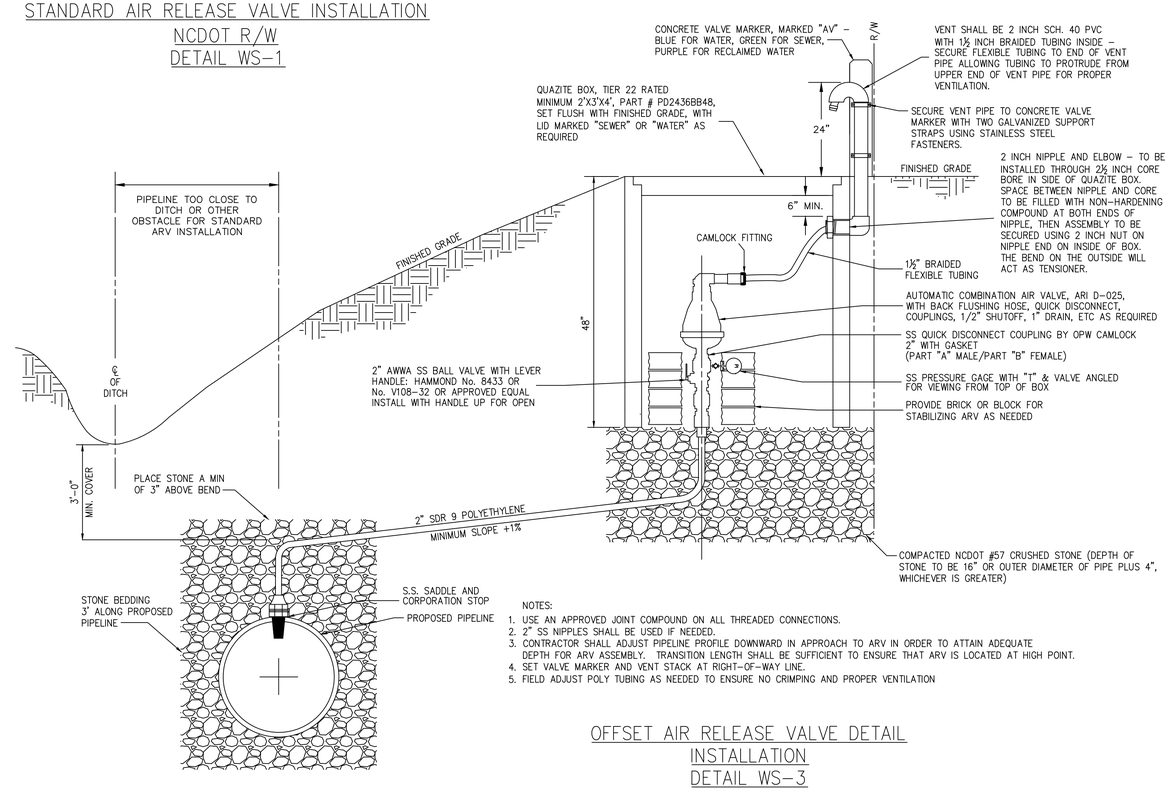

NOTES:

1. USE AN APPROVED JOINT COMPOUND ON ALL THREADED CONNECTIONS.
2. 2" SS NIPPLES SHALL BE USED IF NEEDED.
3. CONTRACTOR SHALL ADJUST PIPELINE PROFILE DOWNWARD IN APPROACH TO ARV IN ORDER TO ATTAIN ADEQUATE DEPTH FOR ARV ASSEMBLY. TRANSITION LENGTH SHALL BE SUFFICIENT TO ENSURE THAT ARV IS LOCATED AT HIGH POINT.
4. SET VALVE MARKER AND VENT STACK AT RIGHT-OF-WAY LINE.
5. FIELD ADJUST POLY TUBING AS NEEDED TO ENSURE NO CRIMPING AND PROPER VENTILATION

OFFSET AIR RELEASE VALVE DETAIL
INSTALLATION
DETAIL WS-3

Revisions

1.1 - DATED 4/30/2013 Modified WS-1, 2, AND 3
1.2 - DATED 1/16/2014 Modified / Relocated WS-1, 2, AND 3
1.3 - DATED 4/29/2016 Modified WS-2 and WS-3

COUNTY OF BRUNSWICK

GENERAL WATER & SEWER DETAILS FOR BRUNSWICK COUNTY NORTH CAROLINA

Date: 06-05-12
Scale: NTS
Drawn By: JDM
Checked By: WLP