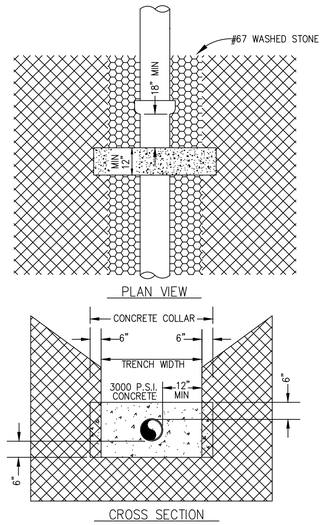

NOTES:

1. UNRESTRAINED SEWER LINES ON 20% SLOPE OR GREATER SHALL BE ANCHORED SECURELY WITH CONCRETE COLLARS. MINIMUM 1 CONCRETE COLLAR PER PIPE JOINT. ADDITIONAL COLLARS MAY BE REQUIRED BY ENGINEER.
2. COLLARS FOR ANTI-SEEPAGE (PIPING) CONTROL FOR PIPELINES CONSTRUCTED THROUGH WETLANDS SHALL BE INSTALLED AT LOCATIONS SHOWN ON THE PLANS.

PIPE COLLAR DETAIL
WS-8

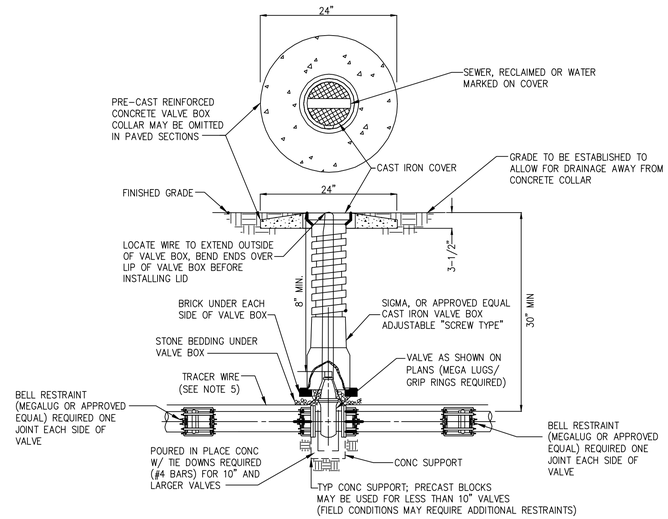

NOTES:

1. TOP OF VALVE BOX AND COLLAR SHALL BE PAINTED GREEN FOR SEWER FM, PURPLE FOR RECLAIMED WATER, AND BLUE FOR WATER.
2. EXTENSION STEM WILL BE REQUIRED TO BE WITHIN 2 FEET OF THE SURFACE IF OPERATING NUT WOULD OTHERWISE BE OVER 5 FEET BELOW GRADE. EXTENSIONS SHALL BE PERMANENTLY ATTACHED TO VALVE NUT AND SHALL BE PROVIDED WITH HORIZONTAL SPACERS FOR VERTICAL ALIGNMENT WITHIN THE VALVE BOX.
3. MINIMUM CLEARANCE TO EXTENSION IS 8".
4. WIRE COLORS REQUIRED: SEWER-GREEN/WATER-BLUE/RECLAIMED WATER-PURPLE OR GREEN WITH PURPLE STRIPE
5. 12 GA. COPPERHEAD SUPER FLEX TRACER WIRE OR APPROVED EQUAL.

VALVE BOX
DETAIL WS-9

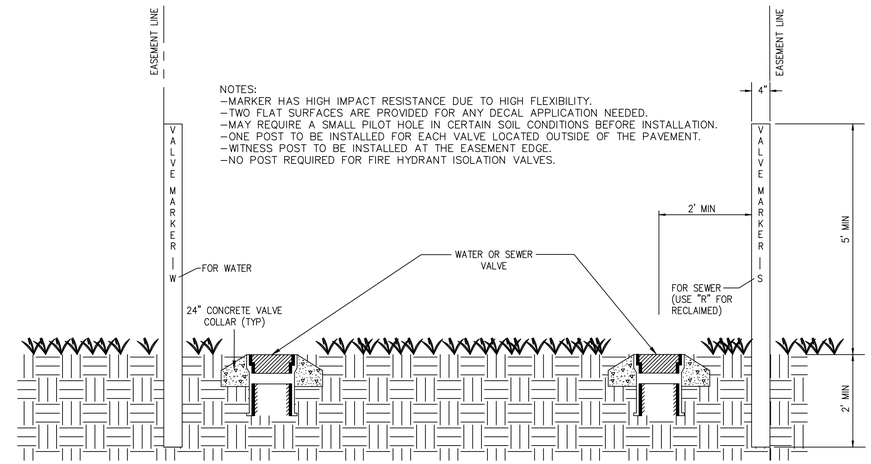

NOTES:
-MARKER HAS HIGH IMPACT RESISTANCE DUE TO HIGH FLEXIBILITY.
-TWO FLAT SURFACES ARE PROVIDED FOR ANY DECAL APPLICATION NEEDED.
-MAY REQUIRE A SMALL PILOT HOLE IN CERTAIN SOIL CONDITIONS BEFORE INSTALLATION.
-ONE POST TO BE INSTALLED FOR EACH VALVE LOCATED OUTSIDE OF THE PAVEMENT.
-WITNESS POST TO BE INSTALLED AT THE EASEMENT EDGE.
-NO POST REQUIRED FOR FIRE HYDRANT ISOLATION VALVES.

VALVE MARKER IN EASEMENTS (UNPAVED)
DETAIL WS-10

NOTES:
1. VALVE MARKER TO BE INSTALLED UPRIGHT WITH THE CAST 'MV' FACING THE NEAREST STREET.
2. DIRECTION AND DISTANCE MUST BE ETCHED OR STAMPED INTO THE BRONZE INSERT.
3. ONE POST TO BE INSTALLED FOR EACH VALVE LOCATED OUTSIDE OF THE PAVEMENT.
4. VALVE MARKER TO BE INSTALLED AT THE RIGHT OF WAY.
5. NO VALVE MARKER REQUIRED FOR FIRE HYDRANT ISOLATION VALVES.
6. PAINT VALVE MARKER USING STANDARD LOCATING COLORS:
   a) WATER – BLUE
   b) SEWER – GREEN
   c) RECLAIMED – PURPLE

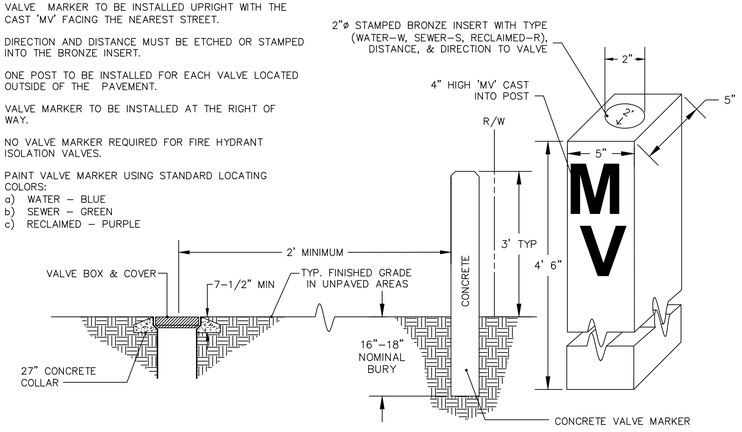

VALVE MARKER IN RIGHT OF WAY (PAVED)
DETAIL WS-11

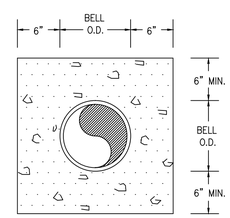

SECTION "A"

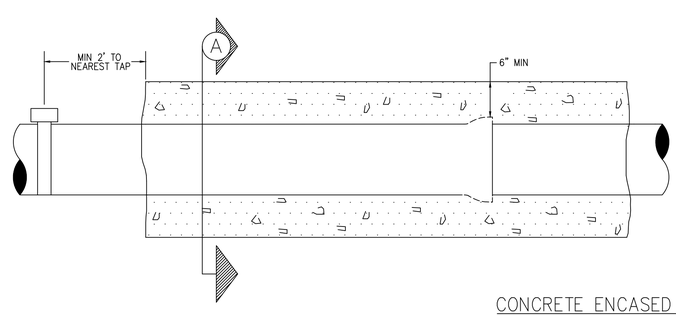

CONCRETE ENCASED PIPE
DETAIL WS-12

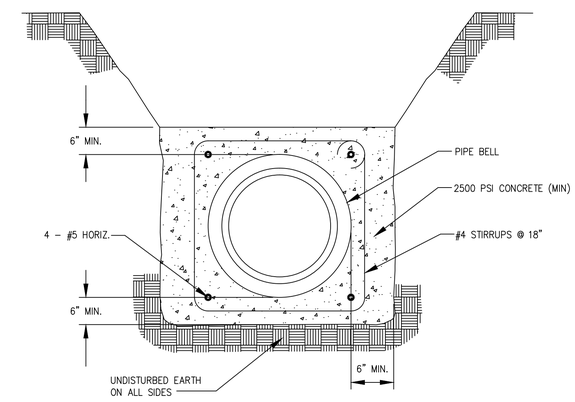

CONCRETE ENCASEMENT DETAIL

Revisions
1.1 - DATED 7/15/2015
Mod collar dim. WS-9 & 10

COUNTY OF BRUNSWICK

GENERAL WATER & SEWER DETAILS
FOR
BRUNSWICK COUNTY
NORTH CAROLINA

Date: 06-12-12
Scale: NTS
Drawn By: JDM
Checked By: WLP