Brunswick County
Operation Services Department

Stephanie Lewis, Director

Construction & Grounds
Building Maintenance
Housekeeping

PO Box 249
Bolivia, NC 28422
(910) 253-2515
www.brunswickcountync.gov

Solid Waste & Recycling
Mosquito Control
Service Center

Brunswick County Operation Services is requesting proposals for HVAC design and installation for Building M at the Brunswick County Government Center.

I. General Information

Building M is located at 69 Stamp Act Drive, NE, Bolivia, NC and is a two-story building totaling approximately 10,450 square feet.

II. Scope of Work

The intent of this scope of work is to remove the existing HVAC systems in their entirety, including all duct, registers and grills, piping, etc. These systems will be replaced with a Heat Recovery VRF type system. The intent of this new system is to provide individual office/area control of the HVAC system including building simultaneous heating and cooling. Outside air, exhaust, and equipment style is addressed in the following paragraphs.

The scope of work for each building is as follows:

1) If necessary, all ceiling grid and tiles will be removed by county and replaced by county.
2) Exiting lights will be hung/supported in their existing locations prior to work by county.
3) Contractor is responsible for obtaining all permits and/or drawings and plans that are required. All permits are paid by county.
4) Design drawings by a NC licensed PE will be the responsibility of the contractor and should be included in the pricing.
5) Electrical Scope, design and Stamped drawings are included in contractor's responsibilities.
6) Contractor must have system balancing performed by a 3rd party independent certified balancing contractor. Documentation must be provided.
7) Contractor must add occupancy sensors to exhaust fans in four restroom facilities.

8) All material, labor and work will carry a one (1) year warranty from the date accepted by the county as substantial completion.
9) Construction schedule indicating durations of work must accompany all bid proposals. Include engineering and electrical work in this schedule.
10) All condensing units will be located on west side of building in similar location of existing equipment. No roof top equipment allowed. No visible duct or duct chases on exterior of building allowed.
11) Any roof penetrations are the responsibility of the contractor, but must be coordinated through Brunswick County Operation Services for approved roofing contractors and to avoid roof warranty issues.
12) All trash and debris is the responsibility of the contractor. Job site must be neat and clean at the end of every shift.
13) Electrical sub-contractor must be listed on proposal.
14) Contractor must show proposed equipment certification for employees completing the installation.
15) Contractor must provide documentation of building pressure and humidity once system installation is complete.
16) Contractor must show proof of at least three (3) completed similar VRF projects and references for this work.
17) Work must begin within 15 days of notice to proceed.

Demolition: Safely remove all mechanical split systems, duct work, refrigerant piping, Freon, refrigerant, registers and grills from Building M.
Proper disposal of these products are the responsibility of contractor.

New System Installation:

Equipment: Heat Recovery Variable Refrigerant type system, allowing simultaneous heating and cooling.
208V/3 phase condensing units.
Air Handlers will be Ceiling Cassette style in all office areas. High side walls are acceptable in data equipment rooms, and mechanical rooms.
If condensate pumps are required, they should be included in this scope of work by contractor.

Zoning: Systems zoned by floor. Each office will have its own ceiling cassette.

Outside Air: One Dedicated outside air split system will serve both floors' hallways, and restrooms. System will be sized such that unit makes up 100% of all exhaust, meets required people load, and maintains a positive building pressure. Outside air calculations by engineer must be included on drawings. (roof top equipment or package equipment not allowed)

Controls: Each air handler will include its own WIRED thermostat within that space.

A central controller networking all devices will be included with a central station located in upstairs mechanical room. Bacnet or LON is not required.

Loads: Existing drawings are available through the county for reference of existing equipment size. However, new building load calculations by engineer are required. Office layout as shown on existing drawings will remain the same.

Refrigerant Piping and Drains:

All refrigerant piping will be copper, drains may be sch 40 PVC or copper.
All condensing lines must be piped to drain outside of the building.

Registers/Grills Air Distribution:

All registers and Grills will be aluminum construction, include balancing dampers on all supply grill and return grills.
All duct work shall be metal with external wrap; flex duct is allowed on runouts to grills but shall not exceed 8' in length.

Electrical: All work must be performed by a licensed contractor.
All wiring will be appropriately sized copper wire.
All panels, devices must be properly labeled to match equipment served.
Existing electrical drawing are available for review prior to bid.
Approved isolation/disconnects are required at each air handler.

III. Minority Business Participation Requirements

Provide with the bid - Under NCGS 143-128.2(c) the undersigned Bidder shall identify **on its bid** (Identification of Minority Business Participation Form) the minority businesses that it will use on the project with the total dollar value of the bids that will be performed by the minority businesses. **Also** list the good faith efforts (Affidavit **A**) made to solicit minority participation in the bid effort.

NOTE: A Contractor that performs all of the work with its own workforce may submit an Affidavit **B** to that effect in lieu of Affidavit **A** required above. The Minority Business Participation Form must still be submitted even if there is zero participation.

After the proposals are received - The Owner will consider all bids and alternates and determine the lowest responsible, responsive bidder. Upon notification of being the apparent low Bidder, the Bidder shall then file within seventy-two (72) hours of the notification of being the apparent lowest Bidder, the following:

An Affidavit **C** that includes a description of the portion of work to be executed by minority businesses, expressed as a percentage of the total Contract price, which is equal to or more than the goal established as indicated in the Notice to Bidders. This affidavit shall give rise to the presumption that the Bidder has made the required good faith effort and Affidavit **D** is not necessary;

OR

If less than the goal, Affidavit **D** of its good faith effort to meet the goal shall be provided. The document must include evidence of all good faith efforts that were implemented, including any advertisements, solicitations, and other specific actions demonstrating recruitment and selection of minority businesses for participation in the Contract.

Note: Bidders must always submit with their bid the Identification of Minority Business Participation Form listing all Minority Business contractors, vendors, and suppliers that will be used. If there is no Minority Business participation, then enter none or zero on the form. Affidavit A or Affidavit B, as applicable, also must be submitted with the bid. Failure to file a required affidavit or documentation with the bid or after being notified apparent low Bidder is grounds for rejection of the bid.

The following documents are attached and made a condition of this quote:

1. Identification of Minority Business Participation
2. MBE Affidavit A (Listing of Good Faith Efforts) and Affidavit B (Intent to Perform Contract with Own Workforce).

IV. Insurance Requirements

The contractor must carry the minimum insurance requirements as described in Attachment "A". The contractor will provide the County with a copy of insurance documents.

V. Price and Type of Bid

Proposals are requested according to the above scope of work and should include all labor, tools, materials and equipment.

VI. Right to Reject

The county reserves the unqualified right to reject any or all proposals when such rejection is deemed to be in the best interest of the county.

VII. Cost to Prepare Proposals

Any cost incurred by a contractor in preparing or submitting a proposal is the sole responsibility of the contractor and will not be eligible for reimbursements by the county.

VIII. Right to Submitted Proposals and Supporting Documents

All written correspondence, proposals and supporting documents received by the county regarding the Request for Proposals will become property of the county.

IX. Proposal Deadline

All proposals must be received no later than **August 18, 2016** at **4:00 pm**. Each should be clearly marked "RFP – Building M HVAC Replacement". These proposals shall be emailed, hand delivered or mailed. These materials should be delivered to Heather Murray, Brunswick County Operation Services Department, PO Box 249, 179 March 9, 1764 Drive NE, Bolivia, NC 28422 or emailed to heather.murray@brunswickcountync.gov.

X. Inquiries

All inquiries concerning this Request for Proposals may be directed to Heather Murray, Brunswick County Operation Services at (910) 253-2503 or heather.murray@brunswickcountync.gov or James Carter, Brunswick County Operation Services at (910) 253-2529 or james.carter@brunswickcountync.gov.

BRUNSWICK COUNTY MINIMUM INSURANCE COVERAGE REQUIREMENTS

At contractor's expense, contractor shall procure and maintain the following recommended lines of insurance according the scope of work. The County may choose to elect higher or lower coverages according to the work performed. Contractors must be insurered by a licensed agent in North Carolina and rated A-VII or better by A.M. Best.

A. COMMERCIAL GENERAL LIABILITY
   Covering all operations involved in this Agreement.
   $2,000,000 General Aggregate
   $2,000,000 Products/Completed Operations Aggregate
   $1,000,000 Each Occurrence
   $1,000,000 Personal and Advertising Injury Limit
   $ 5,000 Medical Expense Limit

B. WORKERS' COMPENSATION
   Statutory limits covering all employees, including Employer's Liability with limits of:
   $500,000 Each Accident
   $500,000 Disease - Each Employee
   $500,000 Disease - Policy Limit

C. COMMERCIAL AUTOMOBILE LIABILITY
   $1,000,000 Combined Single Limit – Any Auto

D. PROFESSIONAL LIABILITY
   $1,000,000 Per Occurrence

E. POLLUTION LIABILITY INSURANCE
   $1,000,000 Per Occurrence

When a contractor is required to bind pollution/environmental coverage, the contractor must provide evidence of continuation or renewal of liability insurance for a period of three (3) years following termination of the agreement.

ADDITIONAL INSURANCE AND INDEMNIFICATION REQUIREMENTS

A. Contractor agrees to defend, indemnify, and hold harmless Brunswick County, its officers, employees, and agents from and against any and all losses, penalties, damages,
   settlements, costs, charges, professional fees, or other expenses or liabilities of every kind and character arising out of or relating to any and all claims, liens, demands, obligations, actions, proceedings, or causes of action of every kind in connection with or arising out of this Agreement and/or the performance hereof that are due in part or in the entirety of Contractor, its employees or agents. Contractor further agrees to investigate, handle, respond to, defend and dispose of same at its sole expense and agrees to bear all other costs and expenses related thereto.

The Contractor's General Liability policy shall be endorsed, specifically or generally, to include the following as Additional Insured:
BRUNSWICK COUNTY, ITS OFFICERS, AGENTS AND EMPLOYEES ARE INCLUDED AS ADDITIONAL INSURED UNDER CONTRACTOR'S GENERAL LIABILITY INSURANCE.

B. Before commencement of any work or event, Contractor shall provide a Certificate of Insurance in satisfactory form as evidence of the insurances required above.

C. Contractor shall have no right of recovery or subrogation against Brunswick County (including its officers, agents and employees), it being the intention of the parties that the insurance policies so affected shall protect both parties and be primary coverage for any and all losses covered by the above-described insurance.

D. Brunswick County shall have no liability with respect to Contractor's personal property whether insured or not insured. Any deductible or self-insured retention is the sole responsibility of Contractor.

E. All certificates of insurance must provide that the policy or policies shall not be changed or cancelled without at least thirty (30) days prior written notice.

F. The Certificate of Insurance should note in the Description of Operations the following:
Department: Operation Services
Contract #: _____

G. Insurance procured by Contractor shall not reduce nor limit Contractor's contractual obligation to indemnify, hold harmless and defend Brunswick County for claims made or suits brought which result from or are in connection with the performance of this Agreement.

H. In the event Contractor receives Notice of Cancellation of Insurance required pursuant to this Agreement, Contractor shall immediately cease performance of all services and shall provide Notice to Brunswick County's Legal/Risk Management personnel within twenty-four (24) hours.

I. Certificate Holder shall be listed as follows;
ATTENTION: Brunswick County Risk Manager
30 Government Center Dr. NE
P.O. Box 249
Bolivia, NC 28422

J. If Contractor is authorized to assign or subcontract any of its rights or duties hereunder and in fact does so, Contractor shall ensure that the assignee or subcontractor satisfies all requirements of this Agreement, including, but not limited to, maintenance of the required insurances coverage and provision of certificate(s) of insurance and additional insured endorsement(s), in proper form prior to commencement of services.

ATTACHED DOCUMENTS

The following documents are attached to and made a condition of this Bid:

- Identification of Minority Business Participation form
- MBE Affidavit A (Listing of Good Faith Efforts) or Affidavit B (Intent to Perform Contract with Own Workforce)

MINORITY BUSINESS PARTICIPATION REQUIREMENTS:

Provide with the bid - Under NCGS 143-128.2(c) the undersigned Bidder shall identify **on its bid** (Identification of Minority Business Participation Form) the minority businesses that it will use on the project with the total dollar value of the bids that will be performed by the minority businesses. **Also** list the good faith efforts (Affidavit **A**) made to solicit minority participation in the bid effort.

> **NOTE**: A Contractor that performs all of the work with its own workforce may submit an Affidavit **B** to that effect in lieu of Affidavit **A** required above. The Minority Business Participation Form must still be submitted even if there is zero participation.

After the proposals are recieved - The Owner will consider all bids and alternates and determine the lowest responsible, responsive bidder. Upon notification of being the apparent low Bidder, the Bidder shall then file within seventy-two (72) hours of the notification of being the apparent lowest Bidder, the following:

An Affidavit **C** that includes a description of the portion of work to be executed by minority businesses, expressed as a percentage of the total Contract price, which is equal to or more than the goal established as indicated in the Notice to Bidders. This affidavit shall give rise to the presumption that the Bidder has made the required good faith effort and Affidavit **D** is not necessary;

OR

If less than the goal, Affidavit **D** of its good faith effort to meet the goal shall be provided. The document must include evidence of all good faith efforts that were implemented, including any advertisements, solicitations, and other specific actions demonstrating recruitment and selection of minority businesses for participation in the Contract.

Note: Bidders must always submit **with their bid** the Identification of Minority Business Participation Form listing all Minority Business contractors, vendors, and suppliers that will be used. If there is no Minority Business participation, then enter none or zero on the form. Affidavit A **or** Affidavit B, as applicable, also must be submitted with the bid. Failure to file a required affidavit or documentation with the bid or after being notified apparent low Bidder is grounds for rejection of the bid.

Proposal Signature Page

The undersigned further agrees that in the case of failure on his part to execute the said Contract, provide performance and payment bonds, and certificates of insurance within ten (10) consecutive calendar days after being given written notice of the award of Contract, the certified check, cash, or bid bond accompanying this bid shall be paid into the funds of the Owner's account set aside for the project, as liquidated damages for such failure; otherwise the certified check, cash, or bid bond accompanying this proposal shall be returned to the undersigned.

Respectfully submitted this day of _____

_____
(Name of Firm or Corporation Making Bid)

WITNESS:

_____
(Proprietorship, Partnership, or LLC)

By: _____
Signature

Name: _____
Print or Type

Title: _____
(Owner/Co-Partner/President/Vice President/Manager)

Address: _____

_____

License No. _____

Federal I.D. No. _____

ATTEST:

By: _____

Title: _____
(Corp. Sec. or Asst. Sec. only)

(CORPORATE SEAL)

Identification of Minority Business Participation

I,_____,
(Name of Bidder)

do hereby certify that on this project, we will use the following Minority Business Enterprises (MBE) as subcontractors, vendors, suppliers, or providers of professional services.

Firm Name, Address, and Phone #	Work Type	*Minority Category

*Minority categories: Black, African American (**B**), Hispanic (**H**), Asian American (**A**) American Indian (**I**), Female (**F**), Socially and Economically Disadvantaged (**D**)

The total value of minority business contracting will be ($)_____.

Brunswick County AFFIDAVIT A – Listing of Good Faith Efforts

(Name of Bidder)

Affidavit of_____

I have made a good faith effort to comply under the following areas checked:

Bidders must earn at least 50 points from the good faith efforts listed for their bid to be considered responsive. (1 NC Administrative Code 30 I.0101)

- ☐ **1 – (10 pts)** Contacted minority businesses that reasonably could have been expected to submit a quote and that were known to the Contractor, or available on State or local government-maintained lists, at least ten (10) days before the bid date and notified them of the nature and scope of the work to be performed.
- ☐ **2 – (10 pts)** Made the plans, specifications, and requirements available for review by prospective minority businesses, or providing these documents to them at least ten (10) days before the bids are due.
- ☐ **3 – (15 pts)** Broken down or combined elements of work into economically feasible units to facilitate minority participation.
- ☐ **4 – (10 pts)** Worked with minority trade, community, or contractor organizations identified by the Office of Historically Underutilized Businesses that provide assistance in recruitment of minority businesses.
- ☐ **5 – (10 pts)** Attended pre-bid meetings scheduled by the owner.
- ☐ **6 – (20 pts)** Provided assistance in getting required bonding or insurance or provided alternatives to bonding or insurance for Subcontractors.
- ☐ **7 – (15 pts)** Negotiated in good faith with interested minority businesses and did not reject them as unqualified without sound reasons based on their capabilities. Any rejection of a minority business based on lack of qualification should have the reasons documented in writing.
- ☐ **8 – (25 pts)** Provided assistance to an otherwise qualified minority business in need of equipment, loan capital, lines of credit, or joint pay agreements to secure loans, supplies, or letters of credit, including waiving credit that is ordinarily required. Assisted minority businesses in obtaining the same unit pricing with the Bidder's suppliers in order to help minority businesses in establishing credit.
- ☐ **9 – (20 pts)** Negotiated joint venture and partnership arrangements with minority businesses in order to increase opportunities for minority business participation when possible.
- ☐ **10 – (20 pts)** Provided quick pay agreements and policies to enable minority Contractors and suppliers to meet cash-flow demands.
- ☐ **11 – (20 pts)** A minimum of two (2) or all, if only one (1) is indicated, of the MBE firms indicated on the "Identification of Minority Business Participation" form are **Brunswick County** based.

The undersigned, if apparent low Bidder, will enter into a formal agreement with the firms listed in the Identification of Minority Business Participation schedule conditional upon scope of Contract to be executed with the Owner. Substitution of Contractors must be in accordance with NCGS143-128.2(d) Failure to abide by this statutory provision will constitute a breach of the Contract.

The undersigned hereby certifies that he or she has read the terms of the minority business commitment and is authorized to bind the Bidder to the commitment herein set forth.

Date:_____Name of Authorized Officer:_____

Signature:_____

Title: _____

SEAL

State of_____, County of_____

Subscribed and sworn to before me this _____day of _____20____

Notary Public_____

My commission expires _____

Brunswick County AFFIDAVIT B – Intent to Perform Contract with Own Workforce

Affidavit of_____
(Name of Bidder)

I hereby certify that it is our intent to perform one hundred percent (100%) of the work required for the

_____Contract.
(Name of Project)

In making this certification, the Bidder states that the Bidder does not customarily subcontract elements of this type project, and normally performs and has the capability to perform and will perform all elements of the work on this project with his/her own current work forces; and

The Bidder agrees to provide any additional information or documentation requested by the Owner in support of the above statement.

The undersigned hereby certifies that he or she has read this certification and is authorized to bind the Bidder to the commitments herein contained.

Date:_____Name of Authorized Officer:_____

Signature:_____

Title:_____

SEAL

State of _____, County of _____

Subscribed and sworn to before me this _____day of _____20___

Notary Public _____

My commission expires_____

Brunswick County AFFIDAVIT C – Portion of the Work to be Performed by Minority Firms

(Note this form is to be submitted only by the apparent lowest responsible, responsive Bidder.)

If the portion of the work to be executed by minority businesses as defined in NCGS143-128.2(g) is equal to or greater than the percentage goal listed in the Notice to Bidders of the Bidders total Contract price, then the Bidder must complete this affidavit. This affidavit shall be provided by the apparent lowest responsible, responsive bidder within **seventy-two (72) hours** after notification of being low Bidder.

Affidavit of _____ I do hereby certify that on the
(Name of Bidder)

_____
(Project Name)

Amount of Bid $_____

I will expend a minimum of _____% of the total dollar amount of the Contract with Minority Business Enterprises. Minority businesses will be employed as Subcontractors, vendors, suppliers or providers of professional services. Such work will be subcontracted to the following firms listed below.

Attach additional sheets if required

Name and Phone #	*Minority Category	Work Description	Dollar Value

*Minority categories: Black, African American (**B**), Hispanic (**H**), Asian American (**A**) American Indian (**I**), Female (**F**), Socially and Economically Disadvantaged (**D**)

Pursuant to NCGS143-128.2(d), the undersigned will enter into a formal agreement with Minority Firms for work listed in this schedule conditional upon execution of a Contract with the Owner. Failure to fulfill this commitment may constitute a breach of the Contract.

The undersigned hereby certifies that he or she has read the terms of this commitment and is authorized to bind the Bidder to the commitment herein set forth.

Date:_____ Name of Authorized Officer:_____

Signature:_____

Title:_____

SEAL

State of_____, County of _____

Subscribed and sworn to before me this _____day of _____20_____

Notary Public_____

My commission expires_____

Do not submit with bid Do not submit with bid Do not submit with bid Do not submit with bid

Brunswick County AFFIDAVIT D – Good Faith Efforts

(Note this form is to be submitted only by the apparent lowest responsible, responsive bidder.)

If the percentage goal of participation by minority business listed in the Notice to Bidders **is not** achieved, the Bidder shall provide the following documentation to the Owner of his good faith efforts:

Affidavit of _____ I do hereby certify that on the
(Name of Bidder)

_____
(Project Name)

Amount of Bid $_____

I will expend a minimum of _____% of the total dollar amount of the Contract with Minority Business Enterprises. Minority businesses will be employed as Subcontractors, vendors, suppliers or providers of professional services. Such work will be subcontracted to the following firms listed below. (Attach additional sheets if required)

Name and Phone #	*Minority Category	Work Description	Dollar Value

*Minority categories: Black, African American (**B**), Hispanic (**H**), Asian American (**A**) American Indian (**I**), Female (**F**), Socially and Economically Disadvantaged (**D**)

Examples of documentation that may be required to demonstrate the Bidder's good faith efforts to meet the goals set forth in these provisions include, but are not necessarily limited to, the following:

A. Copies of solicitations for quotes to at least three (3) minority business firms from the source list provided by the State for each subcontract to be let under this Contract (if 3 or more firms are shown on the source list). Each solicitation shall contain a specific description of the work to be subcontracted, location where bid documents can be reviewed, representative of the Prime Bidder to contact, and location, date, and time when quotes must be received.

B. Copies of quotes or responses received from each firm responding to the solicitation.

C. A telephone log of follow-up calls to each firm sent a solicitation.

D. For subcontracts where a minority business firm is not considered the lowest responsible Sub-Bidder, copies of quotes received from all firms submitting quotes for that particular subcontract.

E. Documentation of any Contacts or correspondence to minority business, community, or contractor organizations in an attempt to meet the goal.

F. Copy of pre-bid roster.

G. Letter documenting efforts to provide assistance in obtaining required bonding or insurance for minority business.

H. Letter detailing reasons for rejection of minority business due to lack of qualification.

I. Letter documenting proposed assistance offered to minority business in need of equipment, loan capital, lines of credit, or joint pay agreements to secure loans, supplies, or letter of credit, including waiving credit that is ordinarily required.

Failure to provide the documentation as listed in these provisions may result in rejection of the bid and award to the next lowest responsible and responsive Bidder.

Pursuant to NCGS143-128.2(d), the undersigned will enter into a formal agreement with Minority Firms for work listed in this schedule conditional upon execution of a Contract with the Owner. Failure to fulfill this commitment may constitute a breach of the Contract.

Do not submit with bid Do not submit with bid Do not submit with bid Do not submit with bid

The undersigned hereby certifies that he or she has read the terms of this commitment and is authorized to bind the Bidder to the commitment herein set forth.

Date:_____Name of Authorized Officer:_____

Signature:_____

Title:_____

SEAL

State of _____, County of _____

Subscribed and sworn to before me this _____day of _____20_____

Notary Public_____

My commission expires _____

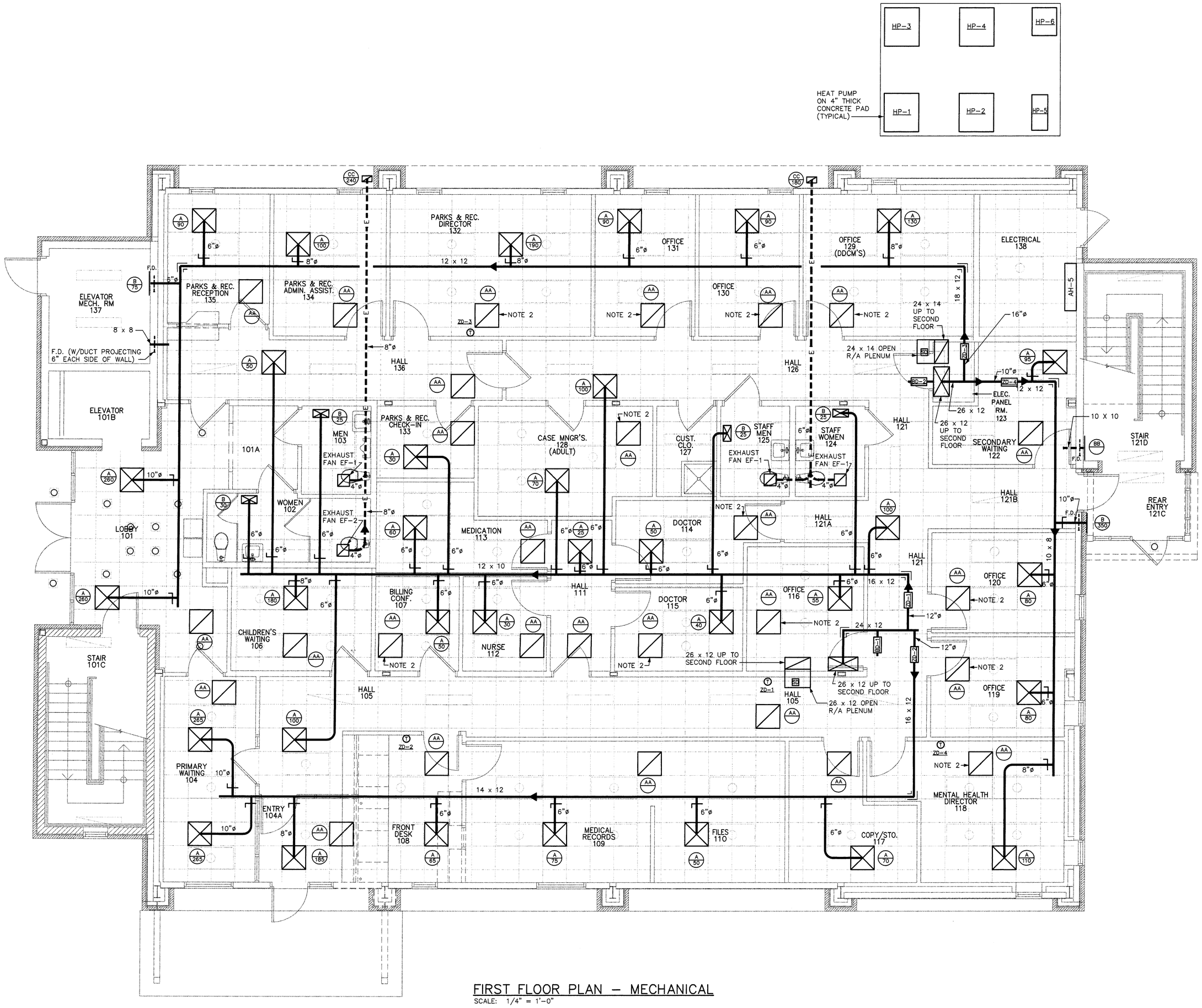

FIRST FLOOR PLAN – MECHANICAL

SCALE: 1/4" = 1'-0"

APPENDIX "B" BUILDING CODE SUMMARY
MECHANICAL:

NAME OF PROJECT: OFFICES FOR SOUTHEASTERN MENTAL HEALTH AND BRUNWICK COUNTY PARKS & RECREATION
ADDRESS: BOLIVIA, NC
PROPOSED USE: OFFICES

OWNER/CONTACT PERSON: BRUNSWICK COUNTY

CODE ENFORCEMENT JURISDICTION: BRUNSWICK COUNTY
BUILDING OCCUPANCY: OFFICES
GROSS BUILDING AREA: 8281 SF

MECHANICAL SYSTEMS, SERVICE SYSTEMS AND EQUIPMENT.
METHOD OF COMPLIANCE: PRESCRIPTIVE
THERMAL ZONE: II
EXTERIOR DESIGN CONDITION:
WINTER DRY BULB: 22
SUMMER DRY BULB: 88
RELATIVE HUMIDITY: MCWB 76 F
BUILDING HEATING LOAD: 132.8 MBH
BUILDING COOLING LOAD: 288.2 MBH
MECHANICAL SPACING CONDITIONING SYSTEM
DESCRIPTION OF UNIT: SPLIT SYSTEM HEAT PUMP UNITS
HEATING EFFICIENCY: C.O.P. 3.16/3.16/3.16/3.16/(SPF) 7.3/3.10
COOLING EFFICIENCY: SEER 10.00/10.00/10.10/10.00/10.00/10.00
HEAT OUTPUT OF SYSTEMS: 56.5/56.5/56.5/56.5/18.5/34.0 MBH
COOLING OUTPUT OF SYSTEMS: 58.0/58.0/58.0/58.0/17.0/36.2 MBH

LIST EQUIPMENT EFFICIENCIES:
EQUIPMENT SCHEDULES WITH MOTORS (MECHANICAL SYSTEMS)
MOTOR HORSEPOWER:
NUMBER OF PHASES:
MINIMUM EFFICIENCY:
MOTOR TYPE:
OF POLES:
DESIGNER STATEMENT:
TO THE BEST OF MY KNOWLEDGE AND BELIEF, THE DESIGN OF THIS BUILDING COMPLIES WITH THE MECHANICAL SYSTEMS, SERVICE SYSTEMS AND EQUIPMENT REQUIREMENTS OF THE NORTH CAROLINA STATE BUILDING CODE, VOLUME X-ENERGY.

SIGNED: Thomas F. Crow

NAME: THOMAS F. CROW, PE

TITLE: MECHANICAL ENGINEER

MECHANICAL LEGEND

SYMBOL	DESCRIPTION
	RECTANGULAR CEILING MOUNTED S/A GRILLE
	SQUARE CEILING MOUNTED S/A DIFFUSER
	SQUARE CEILING MOUNTED R/A GRILLE OR EXHAUST GRILLE
	RUNNOUT TO DIFFUSER W/VOLUME DAMPER AND CONE EXTRACTOR
	90 DEG. ELBOW W/TURNING VANES
	SUPPY AIR DUCT
	RETURN AIR DUCT
E	EXHAUST DUCT
O/A	OUTSIDE AIR DUCT
T	HEATING AND COOLING THERMOSTAT, MOUNT 5'-0" A.F.F.
S	SYSTEM EMERGENCY SHUT-OFF SWITCH (RED, LABELED)
SD	DUCT SMOKE DETECTOR
S/A	SUPPLY AIR
R/A	RETURN AIR
O/A	OUTSIDE AIR
V.D.	MANUAL VOLUME DAMPER
F.D.	FIRE DAMPER
S.D.	SPLITTER DAMPER
B.D.D.	BACKDRAFT DAMPER
A.F.F.	ABOVE FINISHED FLOOR

General Notes:

1. PROVIDE HEAT PUMP WITH OUTSIDE AIR THERMOSTAT TO LOCK OUT ELECTRIC HEAT ABOVE MFG'S RECOMMENDED SET POINT.
2. PROVIDE SOUND ATTENUATOR SEE SOUND ATTENUATOR DETAIL, THIS SHEET.
3. PROVIDE CONDENSATE TRAP AT UNIT PER MFG'S RECOMMENDATION AND NC CODE. RUN PRIMARY CONDENSATE LINES TO SITE SEWER. COORDINATE WITH SITE CONTRACTOR. RUN SECONDARY CONDENSATE LINES TO 1' ABOVE JANITOR'S SINK IN ROOM 127.
4. PROVIDE SMOKE DETECTOR IN RETURN DUCT FOR AIR HANDLER UNIT.

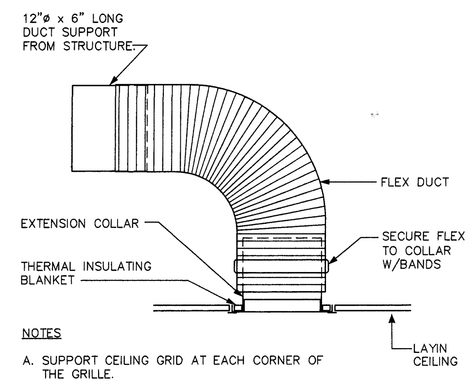

NOTES

A. SUPPORT CEILING GRID AT EACH CORNER OF THE GRILLE.

B. CONTRACTOR SHALL FOLLOW MFGR'S INSTRUCTIONS FULLY INSTALLING THERMAL INSUL. BLANKET, AND GRILLE.

SOUND ATTENUATOR DETAIL

NO SCALE

DATE: 22 FEBRUARY 1999
ARCHITECT'S PROJECT NO.: 109805

OFFICES FOR SOUTHEASTERN MENTAL HEALTH AND B.C. PARKS & RECREATION

BRUNSWICK COUNTY
GOVERNMENT COMPLEX
BOLIVIA, NORTH CAROLINA

John W. Thompson Architect, P.A.
1111 North Howe Street
Southport, North Carolina
28461

910. 457. 5810 (phone)
910. 457. 9263 (fax)

NORTH CAROLINA PROFESSIONAL SEAL 12946 ENGINEER THOMAS F. CROW

3-24-99

CROW & Associates, P.A.
WILMINGTON, NC
PHONE: 910-686-0487
FAX: 910-686-1856

DRAWING TITLE: FIRST FLOOR PLAN – MECHANICAL

SHEET NUMBER: M1 of 2

This drawing is the property of John W. Thompson Architect, P.A. and is not to be reproduced or copied in whole or part without permission of the Architect. Copyright © 1998.

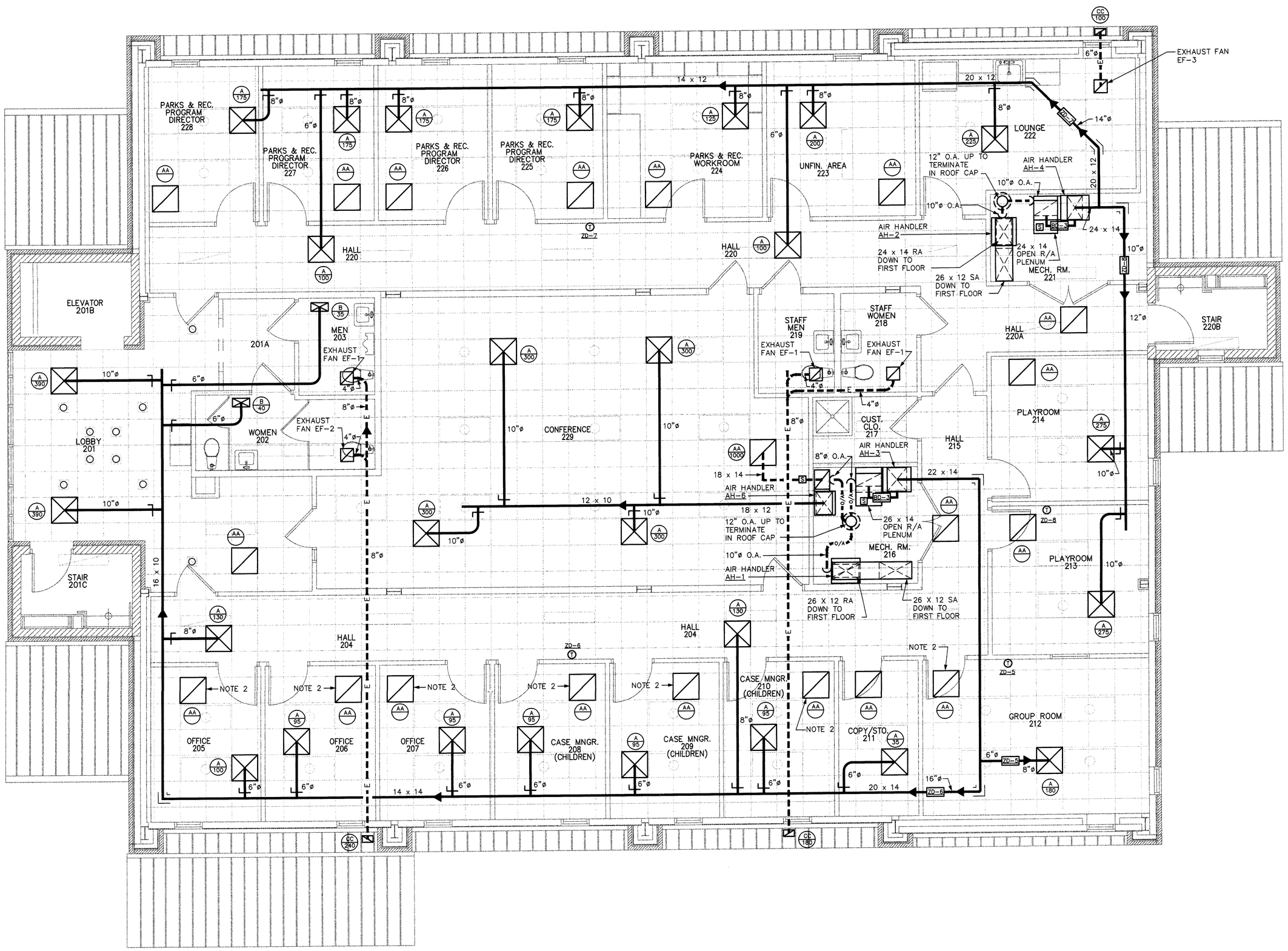

SECOND FLOOR PLAN – MECHANICAL

SCALE: 1/4" = 1'-0"

NOTE:
1. SEE SHEET M1 FOR GENERAL NOTES.
2. PROVIDE SOUND ATTENUATOR. SEE SOUND ATTENUATOR DETAIL, SHEET M1.

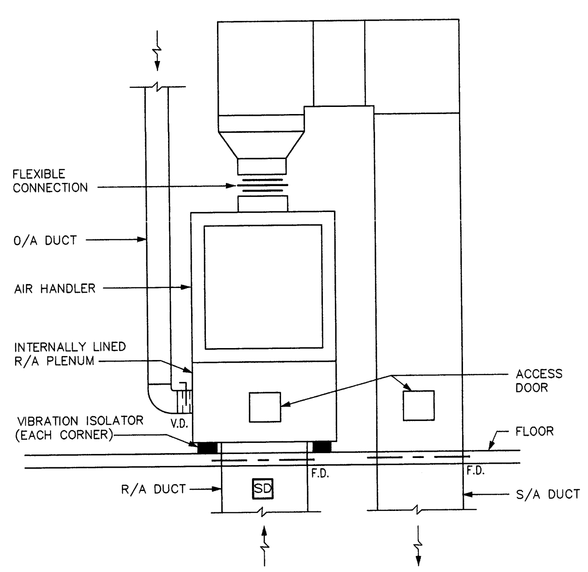

AIR HANDLER AH-1 & 2 DETAIL

NO SCALE

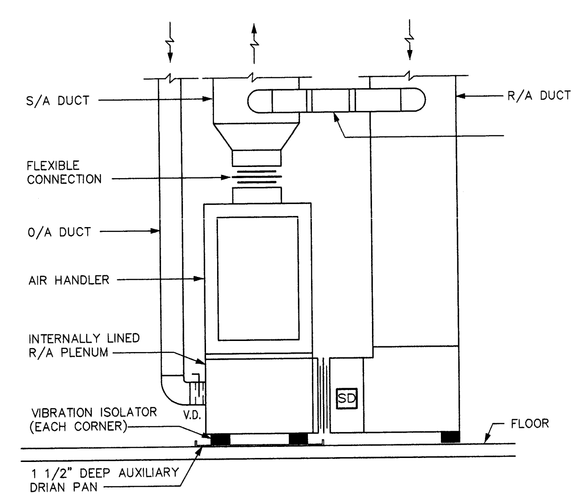

AIR HANDLER AH-3 & 4 DETAIL

NO SCALE

HEAT PUMP SCHEDULE

MARK	FAN SUPPLY CFM	FAN OUTSIDE AIR CFM	FAN TOTAL EXT. SP. IN WG.	PIPING HOT GAS	PIPING LIQUIDS	VOLTS	PHASE	HEAT PUMP	COOLING TOTAL MBH	COOLING SENS. MBH	HEATING TOTAL MBH	VOLTS	PHASE	REMARKS
AH-1	2000	570	1.0	1 1/8"	3/8"	208	1ø	HP-1	59.7	38.9	20.3	460	3ø	7.5 KW ELEC. HT.
AH-2	2000	260	1.0	1 1/8"	3/8"	208	1ø	HP-2	60.8	47.5	28.4	460	3ø	7.5 KW ELEC. HT.
AH-3	2000	160	1.0	1 1/8"	3/8"	208	1ø	HP-3	53.9	45.9	34.0	460	3ø	10 KW ELEC. HT.
AH-4	2000	400	1.0	1 1/8"	3/8"	208	1ø	HP-4	59.0	38.8	24.9	460	3ø	7.5 KW ELEC. HT.
AH-5	420	N/A	N/A	5/8"	1/4"	N/A	N/A	HP-5	17.0	N/A	18.5	208	1ø	DUCTLESS SPLIT SYSTEM
AH-6	1200	200	1.0	7/8"	3/8"	208	1ø	HP-6	37.8	23.2	6.7	460	3ø	4.8 KW ELEC. HT.

NOTES: 1. ELECTRIC HEAT STRIPS ARE BASED ON TOTAL HEATING MBH. RATINGS ARE BASED ON TRANE EQUIPMENT @ 208 V. FOR OTHER MANUFACTURERS VERIFY LOADS AND COORDINATE W/ ELECTRICAL CONTRACTOR.

1. ALL AIR HANDLERS TO HAVE EASILY ACCESSIBLE FILTER SECTION.

DIFFUSER/GRILLE SCHEDULE

MARK	AIR FLOW	MANUFACTURE
A CFM	SUPPLY	PRICE SCDA
B CFM	SUPPLY	PRICE 520
AA CFM	RETURN	PRICE 80TB
BB CFM	RETURN	PRICE 80FF SM
CC CFM	SOFFIT EXHAUST	PRICE 610

ZONE DAMPER SCHEDULE

MARK	SIZE	* MSC	REMARKS
ZD-1	12"ø	190 CFM	
ZD-2	16"ø	342 CFM	
ZD-3	14"ø	167 CFM	
ZD-4	12"ø	93 CFM	
ZD-5	6"ø	18 CFM	
ZD-6	16"ø	142 CFM	
ZD-7	14"ø	290 CFM	
ZD-8	10"ø	110 CFM	

* MIN. STOP CFM

FAN SCHEDULE

MARK	CFM	S.P.
EF-1	90	.25
EF-2	150	.25
EF-3	100	.25

BYPASS DAMPER SCHEDULE

MARK	SIZE	AIR FLOW	REMARKS
BD-1	12"ø	1580 CFM	
BD-2	12"ø	1740 CFM	
BD-3	12"ø	1840 CFM	
BD-4	12"ø	1600 CFM	

DATE: 22 FEBRUARY 1999

ARCHITECT'S PROJECT NO.: 109805

OFFICES FOR SOUTHEASTERN MENTAL HEALTH AND B.C. PARKS & RECREATION

BRUNSWICK COUNTY
GOVERNMENT COMPLEX
BOLIVIA, NORTH CAROLINA

John W. Thompson Architect, P.A.
1111 North Howe Street
Southport, North Carolina
28461

910. 457. 5810 (phone)
910. 457. 9263 (fax)

NORTH CAROLINA PROFESSIONAL SEAL 12913 ENGINEER THOMAS F. CROW

3-24-99

CROW & Associates, P.A.
WILMINGTON, NC
PHONE: 910-686-0487
FAX: 910-686-1856

DRAWING TITLE: SECOND FLOOR PLAN – MECHANICAL

SHEET NUMBER: M2 of 2

This drawing is the property of John W. Thompson Architect, P.A. and is not to be reproduced or copied in whole or part without permission of the Architect. Copyright © 1998.

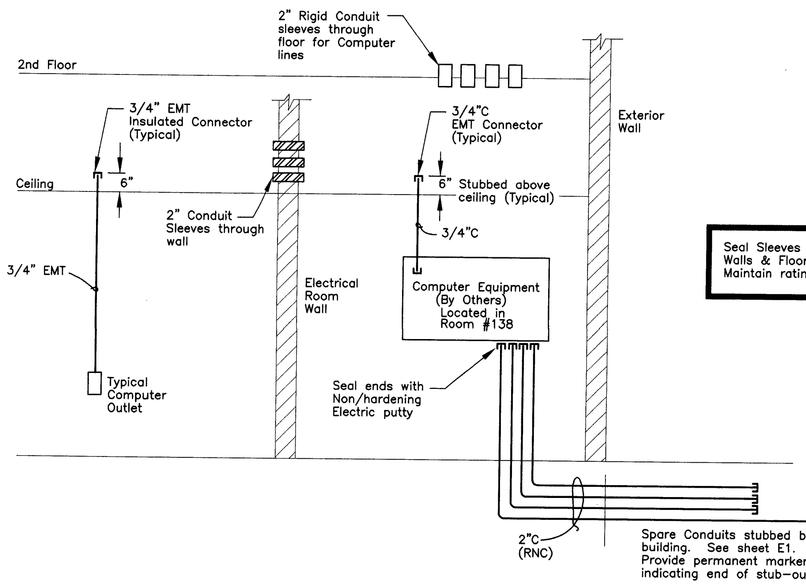

Seal Sleeves through Walls & Floor to Maintain ratings

COMPUTER SYSTEM RISER DIAGRAM

NOT TO SCALE

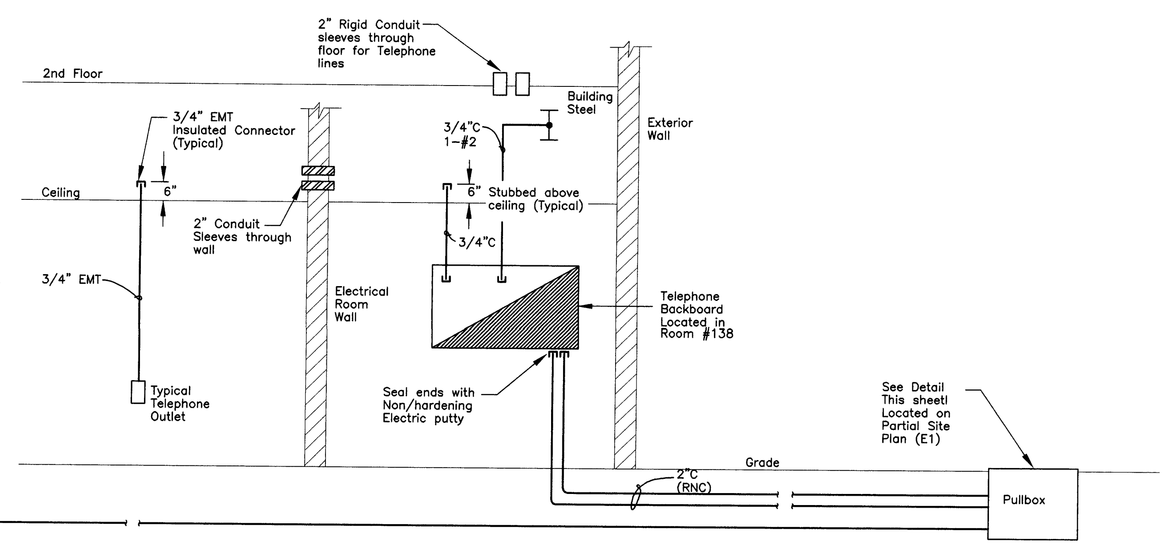

TELEPHONE SYSTEM RISER DIAGRAM

NOT TO SCALE

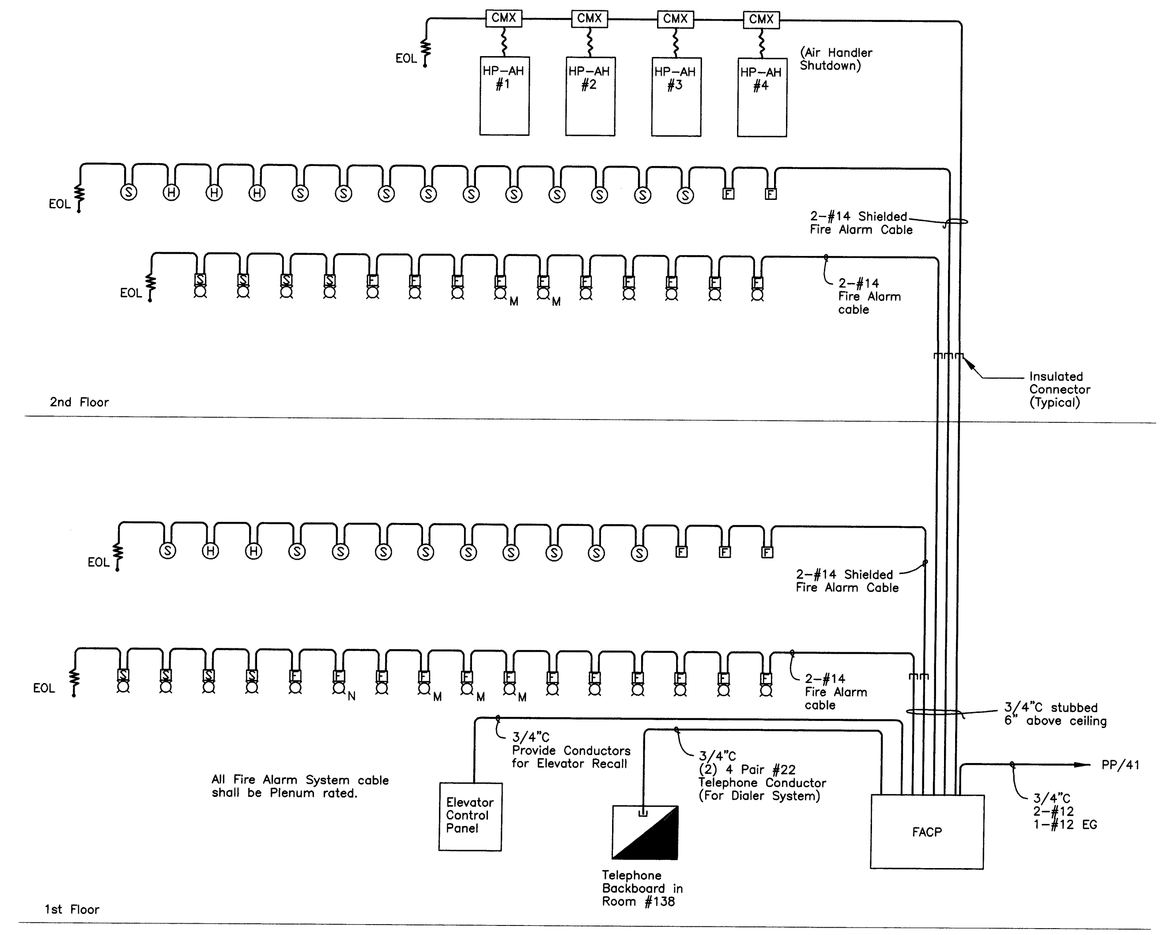

FIRE ALARM SYSTEM RISER DIAGRAM

NOT TO SCALE

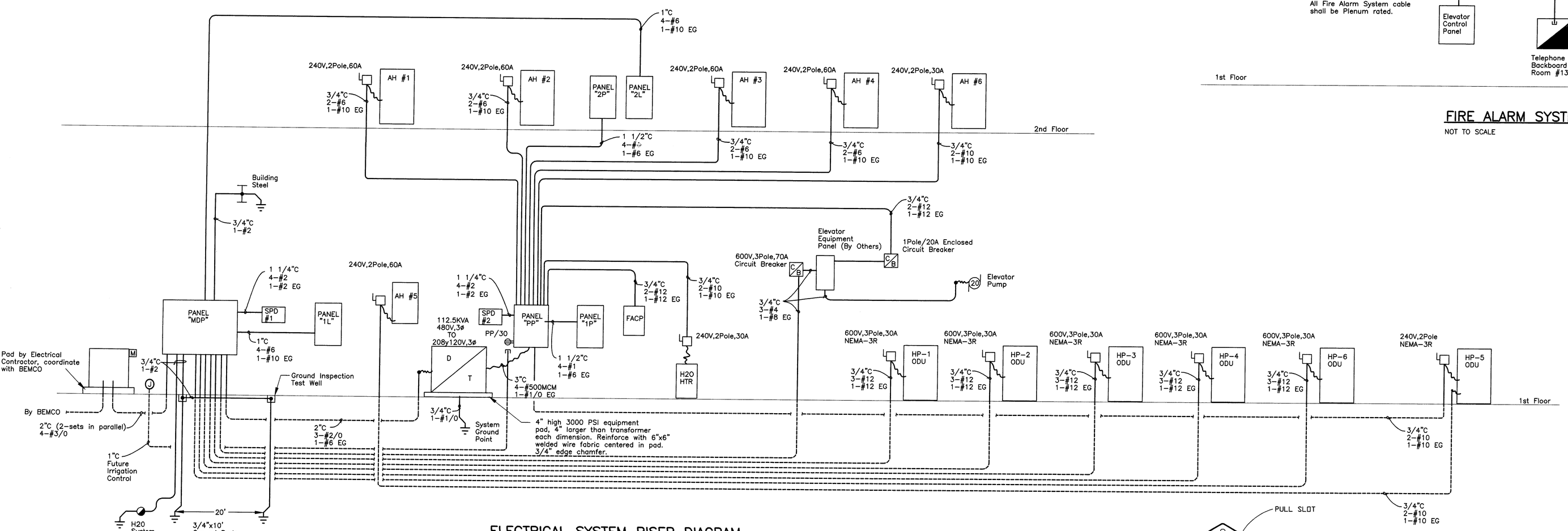

ELECTRICAL SYSTEM RISER DIAGRAM

NOT TO SCALE

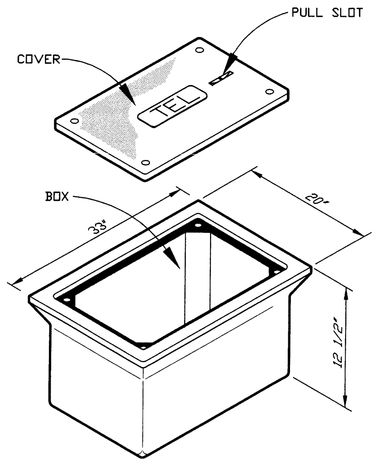

TYPICAL PULLBOX DETAIL

NOT TO SCALE

QUAZITE #PC1730DA12 OR EQUAL

PANEL **MDP** 3ø 4 WIRE 277/480 VOLTS; 400 AMPERE BUS; 400 AMPERE MCB 100 % NEUTRAL. SURFACE MOUNTING; NEMA - 1 ENCLOSURE, EQUIPMENT GROUND BUS, INTEGRATED EQUIPMENT RATING OF 14 ,000 RMS SYMMETRICAL AMPERES MINIMUM,UL'SE LISTED & LABELED

DESIGNATION TO BE TYPED IN PANEL CIRCUIT DIRECTORY	PHASE A	PHASE B	PHASE C	LOADING	CKT BKR TRIP	CKT NO.	CKT NO.	CKT BKR TRIP	PHASE A	PHASE B	PHASE C	LOADING	DESIGNATION TO BE TYPED IN PANEL CIRCUIT DIRECTORY
						1	2						
SPACE					3P/200	3	4	3P/40					SURGE PROTECTION DEVICE
						5	6						
	32140					7	8		3500				
112.5KVA TRANSFORMER		31440				9	10	3P/60		4000			PANEL "1L"
			34440			11	12				3650		
	7500					13	14		3900				
ELEVATOR EQUIPMENT PANEL		7000			3P/70	15	16	3P/60		2200			PANEL "2L"
			7500			17	18				2200		
						19	20		3900				
SPACE						21	22	3P/20		3900			HP-1
						23	24				3900		
	3900					25	26		3900				
HP-2		3900			3P/20	27	28	3P/20		3900			HP-3
			3800			29	30				3800		
	2000					31	32		3900				
HP-6		2000			3P/15	33	34	3P/20		3900			HP-4
			3000			35	36				3900		
						37	38						
SPACE					3P/30	39	40	3P/100					SPACE
						41	42						
NAMEPLATE ENGRAVING:	46540	46840	47840	SUB-TOTAL "A"		SUB-TOTAL "B"			31900	17900	17500		
PANEL "MDP" 277/480V,3Ø,4W						SUB-TOTAL "A"			46540	46840	47840		
						GRAND TOTAL			87440	82740	85300		VOLT - AMPERES
						LINE CURRENT			243	227	238		AMPERES

PANEL **PP** 3ø 4 WIRE 120/208 VOLTS; 400 AMPERE BUS; 400 AMPERE MAIN CIRCUIT BREAKER 100 % NEUTRAL. SURFACE MOUNTING; NEMA - 1 ENCLOSURE, EQUIPMENT GROUND BUS, INTEGRATED EQUIPMENT RATING OF 10 ,000 RMS SYMMETRICAL AMPERES MINIMUM

DESIGNATION TO BE TYPED IN PANEL CIRCUIT DIRECTORY	PHASE A	PHASE B	PHASE C	LOADING	CKT BKR TRIP	CKT NO.	CKT NO.	CKT BKR TRIP	PHASE A	PHASE B	PHASE C	LOADING	DESIGNATION TO BE TYPED IN PANEL CIRCUIT DIRECTORY
	5710					1	2			7260			
PANEL "2P"		5480			3P/125	3	4	3P/125			7700		PANEL "1P"
			6030			5	6					8010	
						7	8	3P/40	5040				AH #2
SURGE PROTECTION DEVICE					3P/40	9	10			5040			
						11	12	3P/50				8130	AH #3
SPARE					1P/20	13	14		8130				
HP #3		2800			3P/20	15	16	3P/40		5040			AH #4
			2800			17	18				5040		
SPARE					1P/20	19	20		360				REC. RM #138 COMPUTER SYSTEM
AH #6		3600			3P/20	21	22	1P/20		360			REC. RM #138 COMPUTER SYSTEM
			3600			23	24				360		REC. RM #138 COMPUTER SYSTEM
						25	26		360				REC. RM #138 COMPUTER SYSTEM
SPACE						27	28			360			REC. RM #138 TELEPHONE SYSTEM
						29	30				180		
	5040				3P/40	31	32						SPARE
AH #1		5040				33	34						
			2250		3P/30	35	36						
HOT H2O HEATER	2250					37	38						
ELEVATOR LIGHTS		500			1P/20	39	40						
FACP			250		1P/20	41	42						
NAMEPLATE ENGRAVING:	13000	17720	14730	SUB-TOTAL "A"		SUB-TOTAL "B"			18140	18000	19710		
PANEL "PP" 120/208V,3Ø,4W						SUB-TOTAL "A"			13000	17720	14730		
						GRAND TOTAL			32140	31440	34440		VOLT - AMPERES
						LINE CURRENT			268	262	287		AMPERES

DATE: 22 FEBRUARY 1999

ARCHITECT'S PROJECT NO.: 109805

OFFICES FOR SOUTHEASTERN MENTAL HEALTH AND B.C. PARKS & RECREATION

BRUNSWICK COUNTY
GOVERNMENT COMPLEX
BOLIVIA, NORTH CAROLINA

John W. Thompson Architect, P.A.
1111 North Howe Street
Southport, North Carolina
28461

910. 910.
457. 457.
5810 9263
(phone) (fax)

NORTH CAROLINA REGISTERED PROFESSIONAL SEAL 17593 ENGINEER JOHN A. CHARBOCCHI 22FEB99

Engineers Planners Surveyors
WK DICKSON
98794.80 / E5
3177 WRIGHTSVILLE AVENUE
WILMINGTON, NC 28403
(910) 762-4200
Raleigh, NC Asheville, NC
Columbia, SC Charlotte, NC
Atlanta, GA Hickory, NC

DRAWING TITLE: **ELECTRICAL RISERS**

SHEET NUMBER: **E5**

This drawing is the property of John W. Thompson Architect, P.A. and is not to be reproduced or copied in whole or part without permission of the Architect. Copyright © 1998.