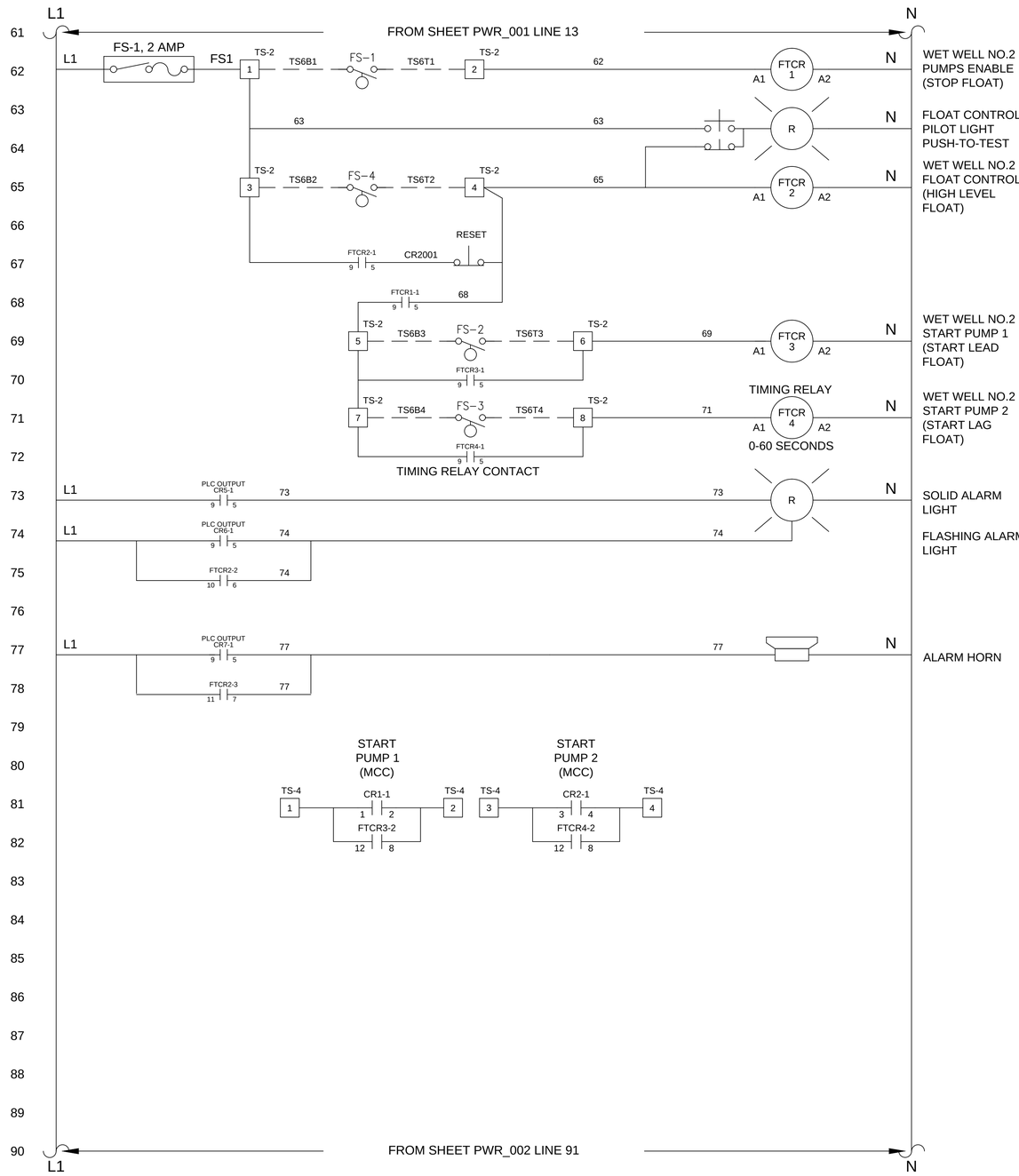

Revisions

1.1 - DATED 4/29/2016
Overhauled
1.2 - DATED 11/10/2016
Added Sheet 10 of 11

COUNTY OF BRUNSWICK

RTU / CONTROL PANEL
PUMPS LARGER THAN 50 HP
UTILIZING VFD'S
FOR
BRUNSWICK COUNTY
NORTH CAROLINA

Date: 05-22-12
Scale: NTS
Drawn By: JDM
Checked By: WLP