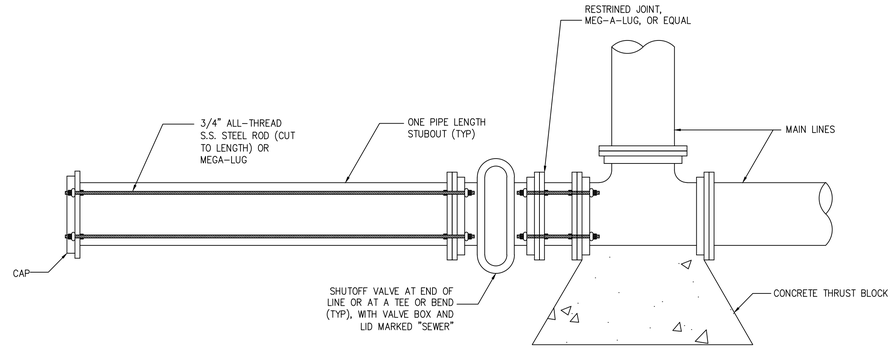

PLAN VIEW

FUTURE FORCE MAIN STUBOUT
DETAIL S-18

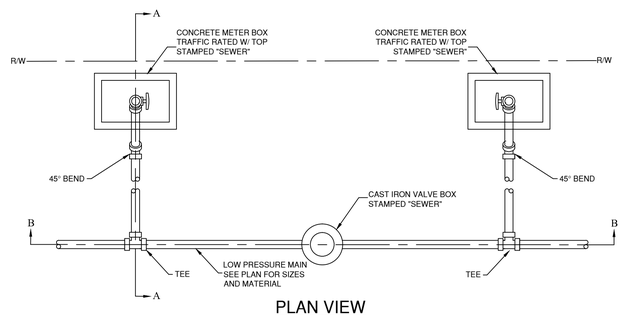

PLAN VIEW

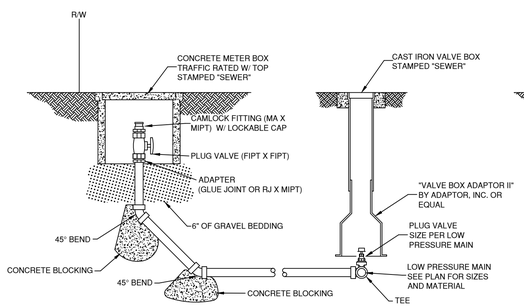

SECTION VIEW A-A

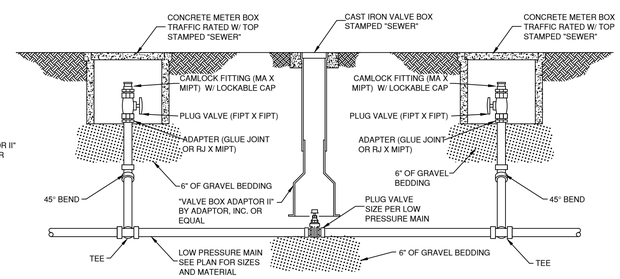

NOTE
SLOPE FINISH GRADE TO DRAIN AWAY FROM BOXES.

SECTION VIEW B-B

IN-LINE PRESSURE SEWER CLEANOUT

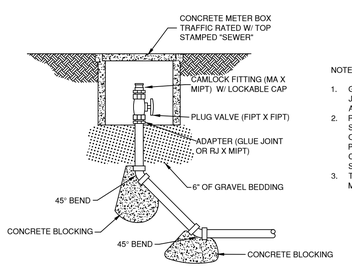

NOTE:

1. GASKETED OR GLUE JOINT PIPE PER APPROVED PLANS.
2. RESTRAINED JOINTS SHALL BE INSTALLED ON GASKETED PIPE PER BRUNSWICK COUNTY TECHNICAL SPECIFICATIONS.
3. THRUST BLOCKING IS MANDATORY.

END OF LINE PRESSURE SEWER CLEANOUT

LOW PRESSURE SEWER CLEANOUT
DETAIL S-19

Revisions

1.1 - DATED 4/30/2013
Modified S-18
1.2 - DATED 3/10/2017
Revised S-19

COUNTY OF BRUNSWICK

GENERAL SEWER DETAILS
FOR
BRUNSWICK COUNTY
NORTH CAROLINA

Date: 1-9-12
Scale: NTS
Drawn By: JTP, MGB
Checked By: