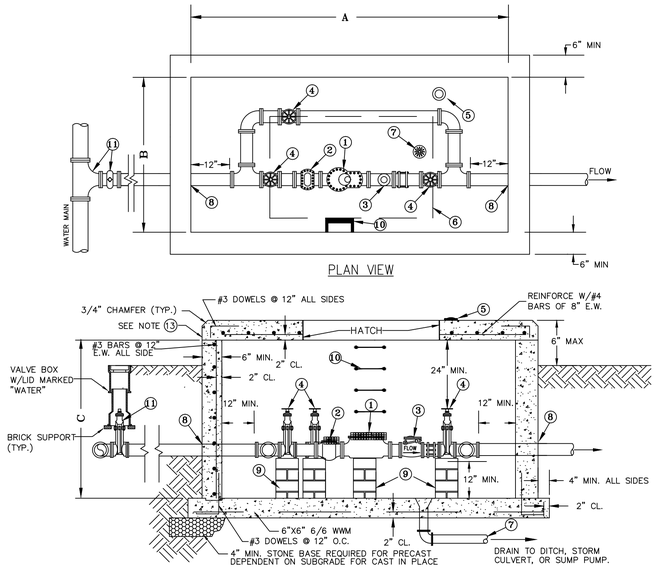

WATER METER VAULTS (3" TO 10")
DETAIL W-7

CONSTRUCTION NOTES:

1. CONCRETE SHALL HAVE 4,000 PSI MIN. COMPRESSIVE STRENGTH AT 28 DAYS.
2. REINFORCING BARS SHALL BE GRADE 60 DEFORMED STEEL.
3. METERS SHALL BE APPROVED BY BRUNSWICK COUNTY.
4. WHERE WALL MOUNTED STEPS ARE NOT ACCESSIBLE FROM HATCH, A PERMANENTLY MOUNTED LADDER MEETING O.S.H.A. STANDARDS SHALL BE PROVIDED.
5. RELOCATE REINFORCEMENT AROUND HATCH TO PROVIDE EQUIVALENT STEEL CROSS-SECTION.
6. ALL PIPING SHALL BE DUCTILE IRON.

MIN. VAULT DIMENSIONS

METER SIZE	A	B	C
3"	8'-6"	5'-6"	5'-0"
4"	9'-6"	5'-6"	5'-0"
6"	11'-0"	6'-0"	5'-6"
8"	12'-0"	7'-0"	6'-0"
10"	14'-0"	8'-0"	6'-0"

1. AWWA C701 TURBINE METER OR AWWA C702 COMPOUND METER w/ENCODING REGISTER FOR REMOTE READING (SENSUS OR APPROVED EQUAL) METER MUST BE SUBMITTED FOR REVIEW AND APPROVAL BY BRUNSWICK COUNTY ENGINEER
2. STRAINER BY METER MANUFACTURER
3. AS DETERMINED BY BRUNSWICK COUNTY, AWWA C508 SWING CHECK VALVE WITH LEVER & WEIGHT, OR SPRING, OR FLOMATIC MODEL 848/895 SPLIT DISC
4. AWWA C509 GATE VALVE w/HAND WHEEL
5. AMR ITRON 50W-2 PIT ERT WITH COMPATIBLE REGISTER OR EQUIVALENT-MUST BE APPROVED BY BRUNSWICK COUNTY
6. SINGLE OR DOUBLE LEAF ALUMINUM HATCH
7. GRAVITY DRAIN TO DAYLIGHT OR SUMP PUMP WITH FORCE MAIN TO STORM DRAINAGE
8. WATERTIGHT GASKET w/HYDRAULIC CEMENT SEAL
9. SOLID MASONRY PIER FIXTURE SUPPORTS
10. STEPS SPACED AT 16" O.C.
11. IN-LINE TEE OR TAPPING SLEEVE w/VALVE AND BOX TO GRADE WITH LID MARKED "WATER"
12. ALL WATER METER VAULTS MUST BE SUBMITTED TO BRUNSWICK COUNTY ENGINEERING DEPARTMENT AS A SHOP SUBMITTAL FOR REVIEW AND APPROVAL.
13. METER VAULT LID SHALL REST ON TOP OF VAULT WALLS- NO JOINTS ARE ALLOWED IN VAULT WALLS- VAULT BOTTOM AND SIDES MAY BE PRECAST BUT TOP SHALL BE PLACED ON TOP OF WALLS.

NOTES:

1. THE BACKFLOW PREVENTION DEVICE MUST BE INSTALLED IN AN ACCESSIBLE LOCATION TO FACILITATE PERIODIC FIELD TESTING AND MAINTENANCE.
2. THE LOCATION SELECTED SHOULD HAVE ADEQUATE DRAINAGE FOR RELIEF VALVE DISCHARGE. DRAINAGE MAY BE PIPED AWAY, PROVIDING AN APPROVED AIR GAP DEVICE IS USED. THE DEVICE SHALL NOT BE PLACED WHERE IT MAY BECOME SUBMERGED IN STANDING WATER.
3. INSTALL THE DEVICE IN A HORIZONTAL POSITION WITH ADEQUATE CLEARANCE FROM WALLS AND/OR OBSTRUCTIONS, FOR TESTING AND MAINTENANCE. A 12" TO 30" CLEARANCE BETWEEN THE LOWER MOST PORTION OF THE DEVICE AND FLOOD GRADE OR FLOOR SHALL BE PROVIDED.
4. A "Y" STRAINER MAY BE INSTALLED JUST UPSTREAM OF THE BACKFLOW PREVENTION ASSEMBLY TO ELIMINATE ANY DEBRIS FROM ENTERING THE DEVICE AND FOULING THE CHECK AND/OR RELIEF VALVE.
5. NO UNDERGROUND INSTALLATIONS ALLOWED.

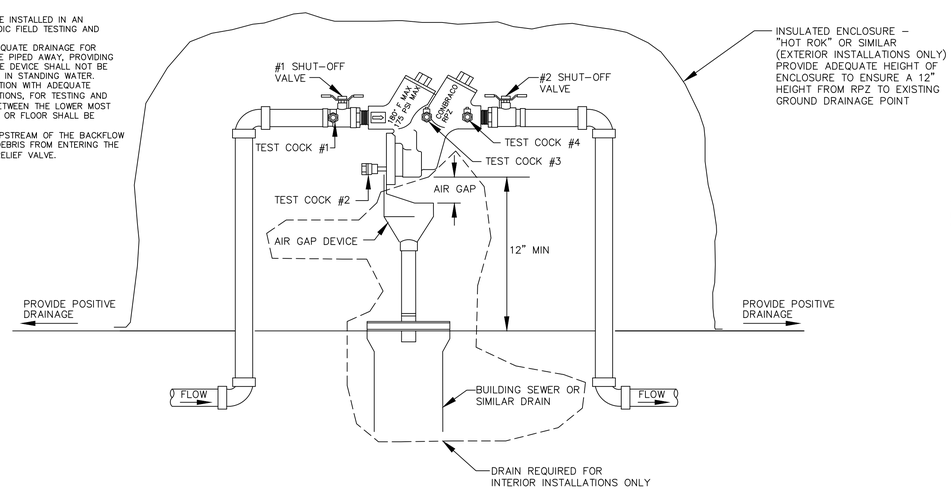

STANDARD BACKFLOW PREVENTION DEVICE
DETAIL W-8

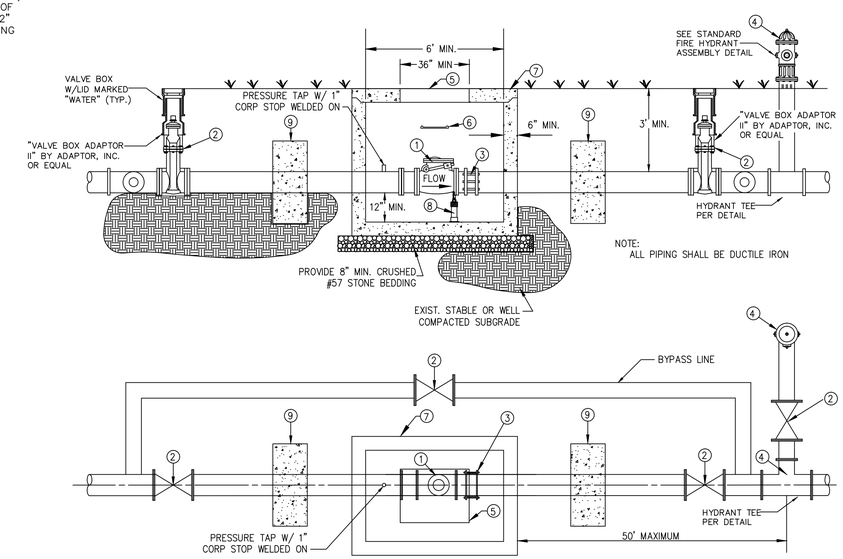

1. AS DETERMINED BY BRUNSWICK COUNTY, AWWA C508 SWING CHECK VALVE WITH LEVER & WEIGHT OR SPRING OR FLOMATIC MODEL 848/895 SPLIT DISC.
2. GATE VALVE WITH VALVE BOX MARKED "WATER".
3. FLANGED COUPLING ADAPTER
4. HYDRANT ASSEMBLY INSTALLED ON DOWNSTREAM SIDE WITHIN 50' OF CHECK VALVE.
5. ALUMINUM HATCH W/ COMPRESSION SPRING OPERATORS OR APPROVED EQUAL.
6. STEPS SPACED AT 16" O.C.
7. PRECAST REINFORCED CONCRETE VAULT WITH H20 LOAD RATING AND MIN. INSIDE DIMENSIONS: 6' L x 5' W x 4' D
8. STANDON MODEL S89 OR APPROVED EQUAL FIXTURE SUPPORT.
9. CONCRETE THRUST COLLAR PER SPECIFICATIONS.

CHECK VALVE VAULT
DETAIL W-9

Revisions

1.1 - DATED 12/8/2016
Revise Detail Numbers
1.2 - DATED 3/10/2017
Revise Detail W-9

COUNTY OF BRUNSWICK

GENERAL WATER DETAILS
FOR
BRUNSWICK COUNTY
NORTH CAROLINA

Date: 06-01-12
Scale: NTS
Drawn By: JDM
Checked By: WLP