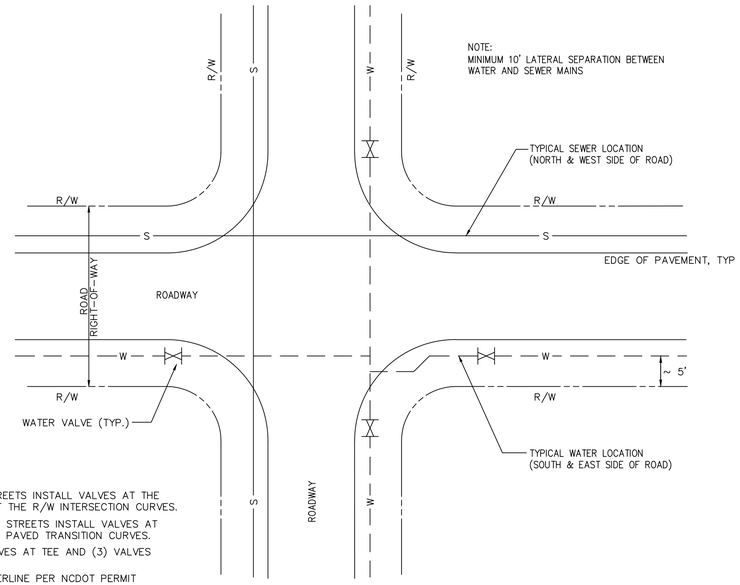

1. FOR NEW STREETS INSTALL VALVES AT THE TANGENTS OF THE R/W INTERSECTION CURVES.
2. FOR EXISTING STREETS INSTALL VALVES AT THE ENDS OF PAVED TRANSITION CURVES.
3. USE (2) VALVES AT TEE AND (3) VALVES AT A CROSS
4. INSTALL WATERLINE PER NCDOT PERMIT IN NCDOT RIGHT-OF-WAY

PLACEMENT OF UTILITIES IN ROAD RIGHT-OF-WAY
AND INTERSECTION VALVE LOCATIONS
DETAIL W-10

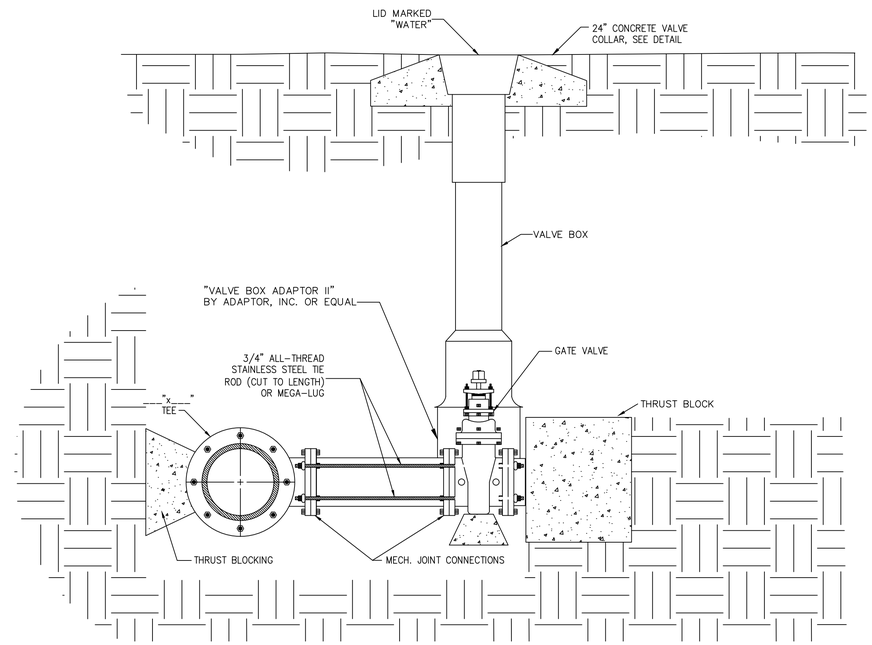

NOTES:

1. CONCRETE SHALL NOT CONTACT BOLTS OR ENDS OF MECHANICAL FITTINGS.
2. ALL TIE RODS AND NUTS TO BE STAINLESS STEEL.
3. LENGTH OF PIPE SHALL BE MINIMUM NEEDED TO INSTALL FITTINGS. VALVE SHALL BE BOLTED DIRECTLY TO TEE WHENEVER POISSIBLE.

ROD REQUIREMENTS	
BRANCH SIZE	NO. OF RODS
4"	2 EA.
6"	2 EA.
8"	4 EA.
12"	4 EA.
16"	6 EA.
20"	6 EA.
24"	6 EA.

BRANCH STUB-OUT FOR FUTURE CONNECTION
(6-INCH DIA AND LARGER MAIN)
DETAIL W-11

BLOCKING DIMENSIONS			
PIPE SIZE	A	B	C
UP TO 10"	4' - 0"	2' - 6"	1' - 6"
12" TO 16"	5' - 0"	4' - 0"	2' - 0"
18" TO 24"	8' - 0"	6' - 0"	3' - 0"

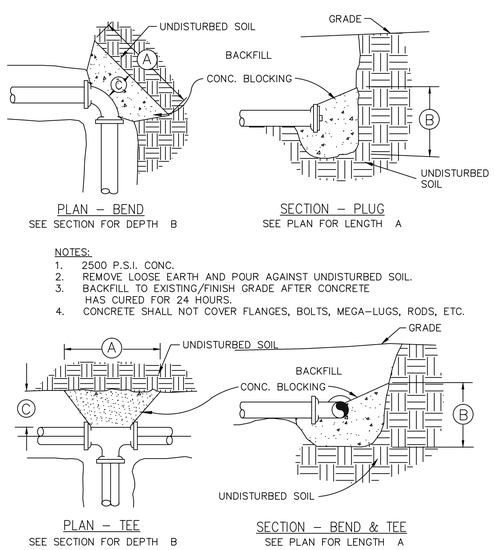

NOTES:
1. 2500 P.S.I. CONC.
2. REMOVE LOOSE EARTH AND POUR AGAINST UNDISTURBED SOIL.
3. BACKFILL TO EXISTING/FINISH GRADE AFTER CONCRETE HAS CURED FOR 24 HOURS.
4. CONCRETE SHALL NOT COVER FLANGES, BOLTS, MEGA-LUGS, RODS, ETC.

THRUST BLOCKS
DETAIL W-12

NOTES:
1. CONCRETE SHALL BE 2500 P.S.I. MIN.
2. REINFORCING BARS SHALL BE DEFORMED AND TIED TOGETHER.
3. TRENCH BOTTOM WIDTH IN VICINITY OF THRUST BLOCK(S) INSTALLATION SHALL BE MINIMUM WIDTH.
4. BACKFILL TAMPED IN 6" LAYERS.

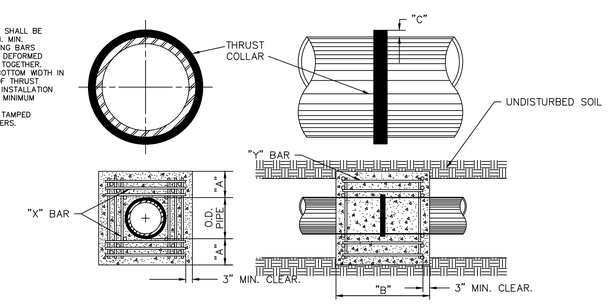

REINFORCING REQUIREMENTS

REINFORCING BAR SCHEDULE						
I.D. PIPE	REBAR SIZE	"X" BAR LENGTH	"X" BAR WGHT.	"Y" BAR LENGTH	Y" BAR WGHT.	NO. REQD.
6"-36"	#5	2'-2"+O.D. PIPE	1.043 LBS./FT	1'-1"	1.1 LBS. EA.	X-24,Y-12
48"	#6	3'-0"+O.D. PIPE	1.502 LBS./FT	1'-3"	1.9 LBS. EA.	X-24,Y-12

REINFORCING BAR SCHEDULE			
I.D. PIPE	"A"	"B"	"C" - 6"-16", 20"-24", 30"-36", 48"
6"-36"	1'-4"	1'-7"	2" 3" 4"
48"	1'-8"	1'-9"	6"

THRUST COLLAR FOR WATER MAINS
DETAIL W-13

Revisions

1.1 - DATED 12/8/2016
Mod. W-11 and
Revise Detail Numbers

COUNTY OF BRUNSWICK

GENERAL WATER DETAILS
FOR
BRUNSWICK COUNTY
NORTH CAROLINA

Date: 06-05-12
Scale: NTS
Drawn By: JDM
Checked By: WLP