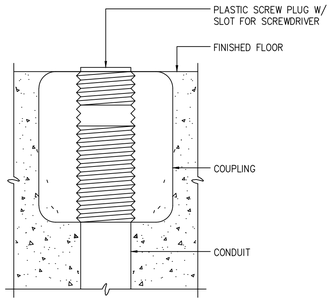

CONDUIT, FLOOR STUB-UP

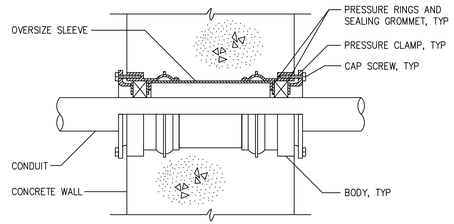

NOTE: USE O-Z/GEDNEY SEAL, TYPE "FSK", "WSK", OR EQUAL

CONDUIT THROUGH WALL SEAL

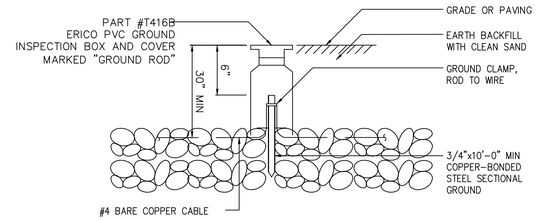

NOTES:

1 REFER TO PS DESIGN MANUAL FOR MINIMUM SYSTEM RESISTANCE. IF THIS RESISTANCE CANNOT BE MET WITH SINGLE 10'-0" RODS, ADD ADDITIONAL SECTIONS TO RODS OR ADD NEW RODS AS REQUIRED, SPACED 20'-0" FROM EXISTING RODS.

ELECTRICAL INSTALLATION DETAIL
GROUND ROD ASSEMBLY

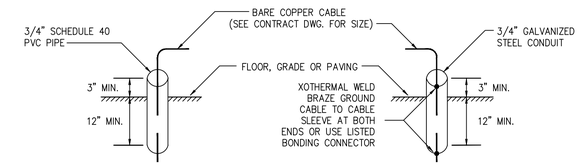

PREFERRED SLEEVE INSTALLATION ALTERNATIVE SLEEVE INSTALLATION

GROUND CABLE SLEEVE INSTALLATION

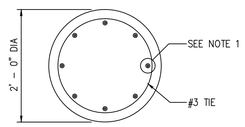

PLAN

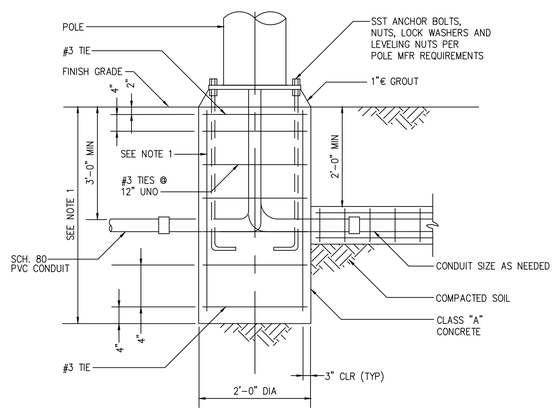

ELEVATION

NOTES:

1 IF NOT SPECIFIED OR SHOWN, DEPTH AND REINFORCEMENT SHALL BE DETERMINED BY POLE MANUFACTURER. LOADING SHALL BE DEAD LOAD PLUS 100 MPH WIND, STANDARD EXPOSURE PER STANDARD BUILDING CODE.

AREA LIGHTING FIXTURE MOUNTING

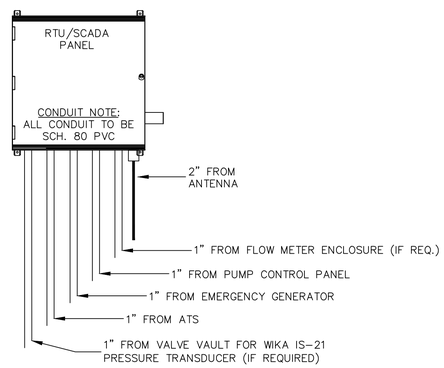

SCADA/RTU PANEL CONDUIT DETAIL

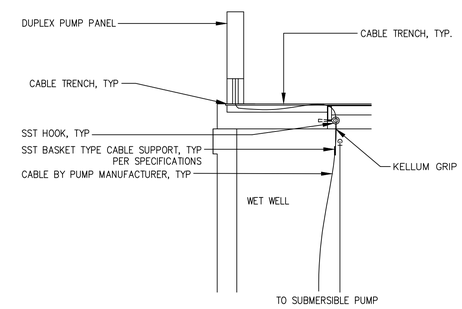

PUMP CABLE DETAIL

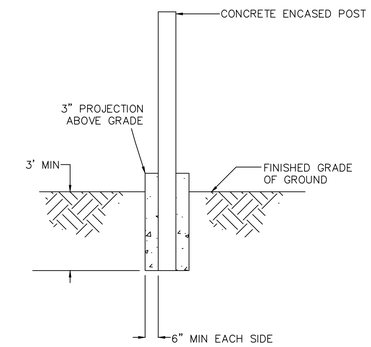

PUMP DISCONNECT POST DETAIL

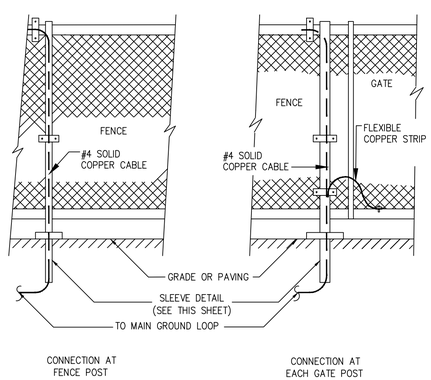

NOTE: PER BRUNSWICK COUNTY DIRECTION, IF REQUIRED, THE PUMP STATION FENCE AND GATES SHALL BE BONDED TO THE PUMP STATION GROUNDING SYSTEM AS SHOWN.

FENCE GROUNDING INSTALLATION DETAIL

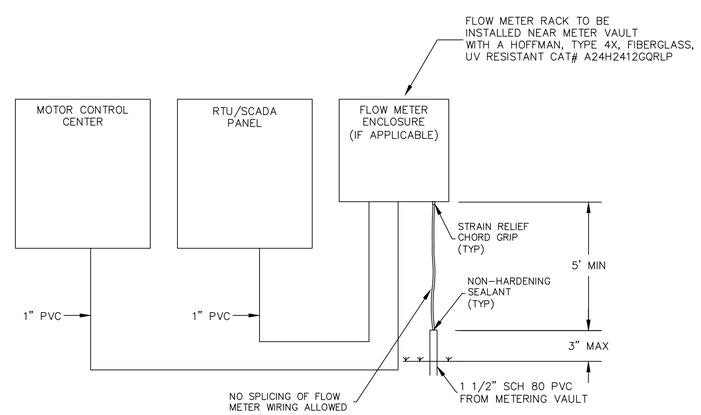

FLOW METER ENCLOSURE
WIRING SCHEME

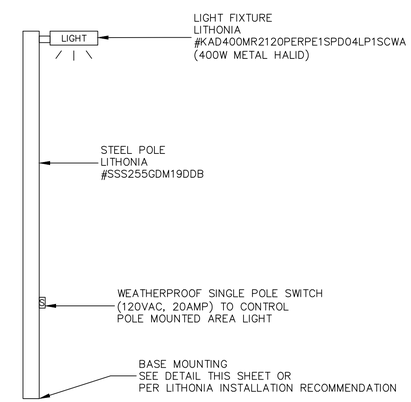

AREA LIGHTING FIXTURE MOUNTING

Revisions

1.1 - DATED 8/8/2013
Modified Transducer Det.
1.2 - DATED 10/15/2013
Add. Flow Meter Encl. +
Mod. RTU Panel Det.
1.3 - DATED 5/2/2016
Mod. Ground Rod Detail
1.4 - DATED 10/9/2017
Mod. Flow Meter Detail
1.5 - DATED 11/9/2018
Mod. Electrical
Installation Detail
1.6 - DATED 11/28/2018
Move Pressure Gauge
Detail to Sheet 2 of 3
1.7 - DATED 5/22/2019
Mod. SCADA & Flow
Meter Details

COUNTY OF BRUNSWICK

PUMP STATION DETAILS
PUMP STATION LARGER THAN 50 HP
FOR
BRUNSWICK COUNTY
NORTH CAROLINA

Date: 04-25-12
Scale: NTS
Drawn By: JDM
Checked By: WLP